PARADISE IRRIGATION DISTRICT

WASHWATER EQUALIZER TANK REPLACEMENT PROJECT

VOLUME 2 - DRAWINGS

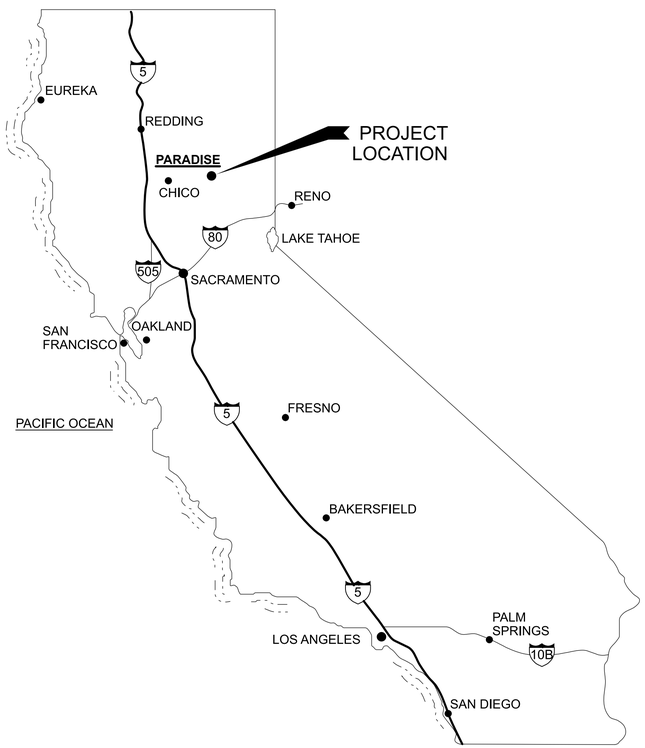

NORTH

VICINITY MAP
NTS

Serving since 1916

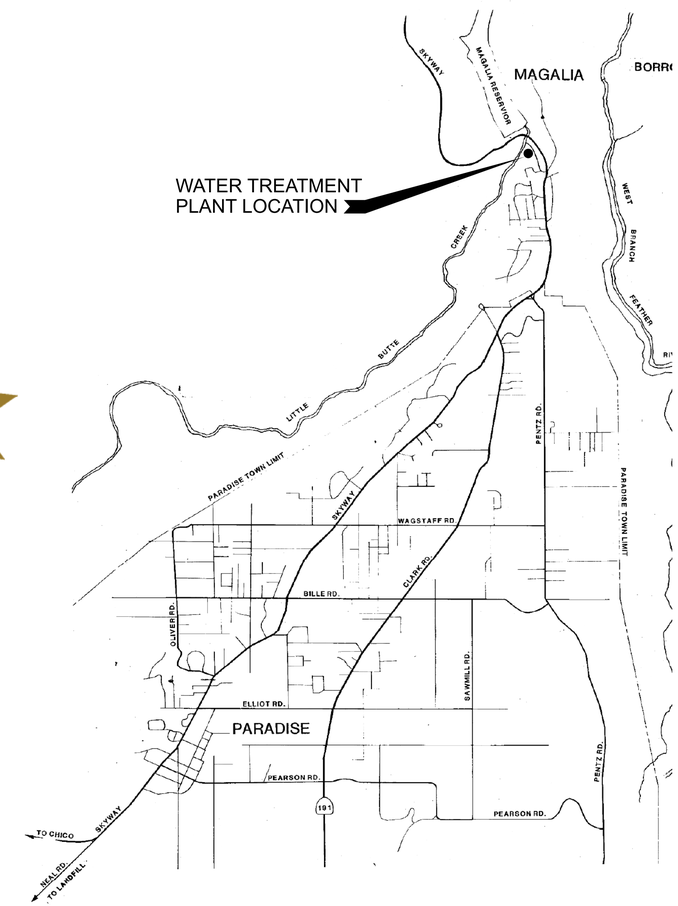

NORTH

LOCATION MAP
NTS

MARCH 2024
BID DOCUMENTS

FOR INFORMATION REGARDING THIS PROJECT CONTACT:

SHEILA NILSEN, P.E.
(530) 243-2113

VERIFY SCALE	NO	DATE	REVISION	BY	APVD
BAR IS ONE INCH ON ORIGINAL DRAWING 0 1"			FOR REFERENCE ONLY PROJECT MANAGER RFP (NOT FOR CONSTRUCTION)		
IF NOT ONE INCH ON THIS SHEET, ADJUST SCALES ACCORDINGLY					

REGISTERED PROFESSIONAL ENGINEER JOSEPH A. RIESS No. C66413 CIVIL STATE OF CALIFORNIA 3/25/2024

DESIGN: S. NILSEN
DRAWN: J. MARTIN
CHECKED: J. RIESS
APPROVED: J. RIESS

WATERWORKS ENGINEERS
760 CYPRESS AVE SUITE 201, REDDING, CA. 96001

PARADISE IRRIGATION DISTRICT
WASHWATER EQUALIZER TANK REPLACEMENT PROJECT
PARADISE, CA

GENERAL
COVER SHEET

DATE: MARCH 2024
PROJECT NO. 22-098
DRAWING NO. G-1
SHEET NO. 1

FILENAME: L:\CAD\Projects\22-098 PID WTP Equalizer Tank Replacement\07 Drawings\2298D-G001.dgn
PLOT DATE: 3/25/2024 PLOT TIME: 3:02:55 AM

DRAWING INDEX

SHEET NUMBER	DISCIPLINE/ DRAWING NUMBER	TITLE
	GENERAL	
1	G-1	COVER SHEET
2	G-2	DRAWING INDEX
3	G-3	GENERAL ABBREVIATIONS
4	G-4	GENERAL DESIGNATIONS
5	G-5	PHASE 1-TANK AND TEMPORARY BYPASS PIPING RENDERING
6	G-6	PHASE 2-TANK RENDERING
	DEMOLITION	
7	1-D-1	PHASE 1-SITE DEMOLITION
8	1-D-2	PHASE 1-DEMOLITION PLAN AND SECTION
9	2-D-1	PHASE 2-DEMOLITION AND TEMPORARY BYPASS PLAN
	CIVIL	
10	C-1	LEGEND, NOTES AND ABBREVIATIONS
11	C-2	EXISTING SITE PLAN
12	1-C-1	PHASE 1-GRADING PLAN
13	2-C-1	PHASE 2-OVERALL PLAN
	STRUCTURAL	
14	S-1	STRUCTURAL ABBREVIATIONS AND NOTES
15	S-2	STRUCTURAL NOTES CONTINUED
16	1-S-1	PHASE 1-TANK 2 PLAN
17	1-S-2	PHASE 1-TANK 2 SECTION
18	1-S-3	PHASE 1-TANK 2 SECTION
19	1-S-4	CONCRETE DETAILS
20	1-S-5	OVERFLOW PIPE SUPPORT DETAIL
21	2-S-1	PHASE 2-TANK 1 PLAN
22	2-S-2	PHASE 2-TANK 1SECTION
23	2-S-3	PHASE 2-TANK 1SECTION
24	SSD-1	STRUCTURAL STANDARD DETAILS
25	SSD-2	STRUCTURAL STANDARD DETAILS
26	SSD-3	STRUCTURAL STANDARD DETAILS
27	SSD-4	STRUCTURAL STANDARD DETAILS
	MECHANICAL	
28	M-1	LEGEND AND NOTES
29	1-M-1	PHASE 1-TANK 2 PLAN
30	1-M-2	PHASE 1-TANK 2 SECTIONS
31	2-M-1	PHASE 2-TANK 1 PLAN
32	2-M-2	PHASE 2-TANK 1 SECTIONS
33	MSD-1	MECHANICAL STANDARD DETAILS
34	MSD-2	MECHANICAL STANDARD DETAILS
	ELECTRICAL	
35	E-1	LEGEND NO. 1
36	E-2	LEGEND NO. 2
37	E-3	LEGEND NO. 3
38	E-4	EXISTING WASHWATER PUMP CONTROL PANEL BLOCK DIAGRAM AND ELEVATION
39	E-5	EXISTING WASHWATER PUMP CONTROL PANEL SCHEMATIC 1
40	E-6	EXISTING WASHWATER PUMP CONTROL PANEL SCHEMATIC 2
41	E-7	EXISTING WASHWATER PUMP CONTROL PANEL SCHEMATIC 3
42	1-E-1	PHASE 1-PUMP BUILDING PLAN AND LP3 BLOCK DIAGRAM
43	1-E-2	PHASE 1-TANK 2 CONDUIT PLAN
44	1-E-3	PHASE 1-TANK 2 GROUNDING PLAN
45	2-E-1	PHASE 2-TANK 1 CONDUIT PLAN
46	2-E-2	PHASE 2-TANK 1 GROUNDING PLAN
47	ESD-1	ELECTRICAL STANDARD DETAILS
48	ESD-2	ELECTRICAL STANDARD DETAILS
	INSTRUMENTATION	
49	N-1	LEGEND NO. 1
50	N-2	LEGEND NO. 2
51	N-3	ABBREVIATIONS
52	N-4	WASHWATER EQUALIZATION TANKS P&ID
53	N-5	WASHWATER PUMP STATION P&ID

VERIFY SCALE

BAR IS ONE INCH ON ORIGINAL DRAWING

0 1"

IF NOT ONE INCH ON THIS SHEET, ADJUST SCALES ACCORDINGLY

NO	DATE	REVISION	BY	APVD

FOR REFERENCE ONLY
PROJECT MANAGER RFP
(NOT FOR CONSTRUCTION)

REGISTERED PROFESSIONAL ENGINEER JOSEPH A. RIESS No. C66413 CIVIL STATE OF CALIFORNIA 3/25/2024

DESIGN S. NILSEN
DRAWN J. MARTIN
CHECKED J. RIESS
APPROVED J. RIESS

WATERWORKS ENGINEERS
760 CYPRESS AVE SUITE 201, REDDING, CA. 96001

PARADISE IRRIGATION DISTRICT

WASHWATER EQUALIZER TANK REPLACEMENT PROJECT

PARADISE, CA

GENERAL

DRAWING INDEX

DATE MARCH 2024
PROJECT NO. 22-098
DRAWING NO. G-2
SHEET NO. 2

FILENAME: L:\CAD\Projects\22-098 PID WTP Equalizer Tank Replacement\07 Drawings\2298D-G002.dgn

PLOT DATE: 3/24/2024 PLOT TIME: 4:30:05 AM

GENERAL ABBREVIATIONS

ABBREVIATION	DEFINITION
@	AT
°C	CELSIUS
°F	DEGREE FAHRENHEIT
AB	AGGREGATE BASE, ANCHOR BOLT
AC	ASPHALTIC CONCRETE, ASBESTOS CEMENT
ACI	AMERICAN CONCRETE INSTITUTE
ACU	AIR CONDITIONING UNIT
ADD	ADDITIONAL
ADJ	ADJACENT, ADJUSTABLE
AFF	ABOVE FINISH FLOOR
AFG	ABOVE FINISH GRADE
AISC	AMERICAN INSTITUTE OF STEEL CONSTRUCTION
AL, ALUM	ALUMINUM
ALT	ALTERNATE
ANSI	AMERICAN NATIONAL STANDARDS INSTITUTE
APPROX	APPROXIMATE
APVD	APPROVED
APWA	AMERICAN PUBLIC WORKS ASSOCIATION
ARCH, A	ARCHITECTURAL
ASTM	AMERICAN SOCIETY FOR TESTING AND MATERIALS
AUTO	AUTOMATIC
AUX	AUXILIARY
AWWA	AMERICAN WATER WORKS ASSOCIATION
BLDG	BUILDING
BLK	BLACK
BOT	BOTTOM
BYP	BYPASS
CFM	CUBIC FEET PER MINUTE
CFS	CUBIC FEET PER SECOND
CHEM	CHEMICAL
CL	CENTERLINE
CLR	CLEAR, CLEARANCE
CLSM	CONTROLLED LOW STRENGTH MATERIAL
COMB	COMBINED
CONC	CONCRETE
CONN	CONNECTION
CONT	CONTINUOUS, CONTINUATION
COORD	COORDINATE
CTR	CENTER
CTRD, CTD	CENTERED
CU FT, CF	CUBIC FOOT
CU IN	CUBIC INCH
CU YD	CUBIC YARD
DBA	DEFORMED BAR ANCHOR, A-WEIGHTED DECIBELS
DBL	DOUBLE
DIA	DIAMETER
DIAG	DIAGONAL
DIM	DIMENSION
DIR	DIRECTION
DIST	DISTANCE
DN	DOWN
DTL	DETAIL
DWG	DRAWING
E	EAST, ELECTRIC, ELECTRICAL
EA	EACH
ECC	ECCENTRIC
EF	EACH FACE, EXHAUST FAN
EL	ELEVATION
ELB, ELL	ELBOW
ENGR	ENGINEER
EPDM	ETHYLENE PROPYLENE DIENE MONOMER
EQPT, EQUIP	EQUIPMENT
EXC	EXCAVATE
EXP	EXPOSED, EXPANSION
EXST	EXISTING
FEXT	FIRE EXTINGUISHER
FF	FINISH FLOOR
FG	FINISH GRADE
FIG	FIGURE
FL	FLOOR, FLOW LINE
FM	FLOW METER
FOC	FACE OF CONCRETE
FRP	FIBERGLASS REINFORCED PLASTIC
FS	FINISHED SURFACE, FLOW SWITCH
FT	FOOT OR FEET
FWD	FORWARD
GA	GAGE
GAC	GRANULAR ACTIVATED CARBON
GAL	GALLON
GALV	GALVANIZED
GL	GLASS
GPD	GALLONS PER DAY
GPH	GALLONS PER HOUR
GPM	GALLONS PER MINUTE
GSP	GALVANIZED STEEL PIPE
GW	GROUND WATER
HDPE	HIGH DENSITY POLYETHLENE
HGL	HYDRAULIC GRADE LINE
HORIZ	HORIZONTAL
HPT	HIGH POINT, HYDROPNEUMATIC TANK
HWL	HIGH WATER LEVEL
HWY	HIGHWAY
I&C	INSTRUMENTATION AND CONTROL
ID	INSIDE DIAMETER
IE	INVERT ELEVATION
IF	INSIDE FACE
IN	INCH
INSUL	INSULATE, INSULATION
INV	INVERT
IP	IRON PIPE
L	LEFT, ANGLE, LENGTH
LAB	LABORATORY
LB	POUNDS
LB/CU FT	POUNDS PER CUBIC FOOT
LF	LINEAR FEET
LR	LONG RADIUS
LWL	LOW WATER LEVEL
MAX	MAXIMUM
MCC	MOTOR CONTROL CENTER
MECH	MECHANICAL
MFR	MANUFACTURER
MGD	MILLION GALLONS PER DAY
MIN	MINIMUM, MINUTE
MISC	MISCELLANEOUS
MPH	MILES PER HOUR
MSP	MILL STEEL PIPE, MANUAL OF STANDARD PRACTICE
MWS	MAXIMUM WATER SURFACE
N	NORTH
NC	NORMALLY CLOSED
NE	NORTHEAST
NEMA	NATIONAL ELECTRICAL MANUFACTURERS ASSOCIATION
NFPA	NATIONAL FIRE PROTECTION ASSOCIATION
NIC	NOT IN CONTRACT
NO	NORMALLY OPEN, NUMBER
NPT	NATIONAL PIPE THREAD
NTS	NOT TO SCALE
NW	NORTHWEST
OD	OUTSIDE DIAMETER
OF	OUTSIDE FACE, OVERFLOW
OFCI	OWNER FURNISHED CONTRACTOR INSTALLED
OG	ORIGINAL GROUND
OPNG	OPENING
OPP	OPPOSITE
OSHA	OCCUPATIONAL SAFETY AND HEALTH ADMINISTRATION
OZ	OUNCE
PE	PLAIN END, POLYETHYLENE
PL	PLATE, PROPERTY LINE
PPM	PARTS PER MILLION
PREFAB	PREFABRICATED
PRESS	PRESSURE
PRI	PRIMARY
PROP	PROPERTY
PS	PUMP STATION
PSF	POUNDS PER SQUARE FOOT
PSI	POUNDS PER SQUARE INCH
PSIG	POUNDS PER SQUARE INCH, GAUGE
R, RAD	RADIUS
RDCR	REDUCER
REF	REFER, REFERENCE
REQD	REQUIRED
RJ	RESTRAINED JOINT
RM	ROOM
RSP	ROCK SLOPE PROTECTION
RT	RIGHT
S	I-BEAM, SOUTH, SLOPE, STRUCTURAL
SCFH	STANDARD CUBIC FEET PER HOUR
SCFM	STANDARD CUBIC FEET PER MINUTE
SCH	SCHEDULE
SE	SOUTHEAST
SEC	SECONDARY
SECT	SECTION
SH	SHEET
SIM	SIMILAR
SP	SPACE, SPACES
SPEC	SPECIFICATION
SQ	SQUARE
SQ FT	SQUARE FOOT
SQ IN	SQUARE INCH
SST	STAINLESS STEEL
STD	STANDARD
STL	STEEL
STR	STRAIGHT
STRUCT	STRUCTURE, STRUCTURAL
SUSP	SUSPEND
SW	SOUTHWEST
T	TANGENT, TELEPHONE LINE, TOP
t, T	THICKNESS
TECH	TECHNICAL
TEL	TELEPHONE
TEMP	TEMPORARY, TEMPERATURE
THD	THREAD
THK	THICK
TNK	TANK
TOC	TOP OF CURB, TOP OF CONCRETE
TOW	TOP OF WALL
TRANS	TRANSITION
TURB	TURBIDITY
TYP	TYPICAL
UBC	UNIFORM BUILDING CODE
UG	UNDERGROUND
UH	UNIT HEATER
UNK	UNKNOWN
UNO	UNLESS NOTED OTHERWISE
V	VENT, VOLT, VALVE
VAC	VACUUM
VERT	VERTICAL
VFD	VARIABLE FREQUENCY DRIVE
W	WIDE FLANGE (BEAM), WEST, WATER
W/	WITH
WP	WATER PROOF
WR	WATER RESISTANT
WS	WATER SURFACE, WATER STOP
WSE	WATER SURFACE ELEVATION
XMFR	TRANSFORMER
YD	YARD

GENERAL NOTES

1. THESE ARE GENERAL ABBREVIATIONS, NOT ALL ABBREVIATIONS MAY BE USED.
2. SEE DRAWINGS FOR EACH DISCIPLINE FOR DISCIPLINE-SPECIFIC ABBREVIATIONS, WHICH MAY DIFFER THAN THOSE SHOWN ON THIS DRAWING.

VERIFY SCALE

BAR IS ONE INCH ON ORIGINAL DRAWING

0 1"

IF NOT ONE INCH ON THIS SHEET, ADJUST SCALES ACCORDINGLY

NO	DATE	REVISION	BY	APVD

FOR REFERENCE ONLY
PROJECT MANAGER RFP
(NOT FOR CONSTRUCTION)

REGISTERED PROFESSIONAL ENGINEER
JOSEPH A. RIESS
No. C66413
CIVIL
STATE OF CALIFORNIA
3/25/2024

DESIGN S. NILSEN
DRAWN J. MARTIN
CHECKED J. RIESS
APPROVED J. RIESS

WATERWORKS ENGINEERS
760 CYPRESS AVE SUITE 201, REDDING, CA. 96001

PARADISE IRRIGATION DISTRICT

WASHWATER EQUALIZER TANK REPLACEMENT PROJECT

PARADISE, CA

GENERAL

GENERAL ABBREVIATIONS

DATE MARCH 2024
PROJECT NO. 22-098
DRAWING NO. G-3
SHEET NO. 3

FILENAME: L:\CAD\Projects\22-098 PID WTP Equalizer Tank Replacement\07 Drawings\2298D-G003.dgn

PLOT DATE: 3/19/2024 PLOT TIME: 5:54:49 AM

DRAWING NUMBERING

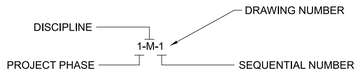

LETTER	DISCIPLINE OR DRAWING TYPE
G	GENERAL
D	DEMOLITION
C	CIVIL
S	STRUCTURAL
M	MECHANICAL
E	ELECTRICAL
N	INSTRUMENTATION
SD	STANDARD DETAIL

NOTES:

1. LETTERS MAY BE COMBINED FOR DUAL-DISCIPLINE DRAWINGS
   EXAMPLE: CD-1, 1-SM-1, ETC.
2. LETTERS MAYBE COMBINED FOR DISCIPLINE-SPECIFIC STANDARD DETAIL DRAWINGS
   EXAMPLE: CSD-1, SSD-1, MSD-1, ETC.

ELEVATIONS

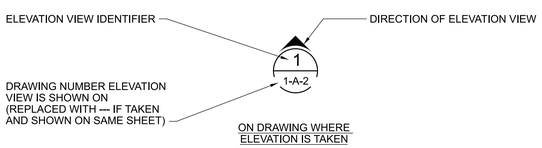

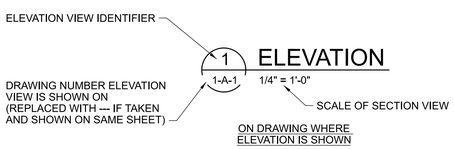

NOTES:

1. SIMILAR SYMBOLOGY IS USED FOR ISOMETRIC VIEWS.

SECTIONS

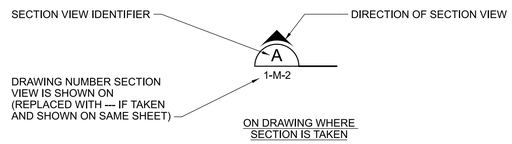

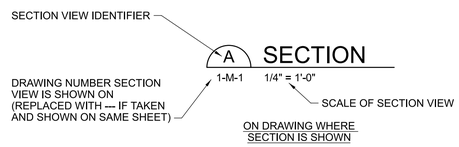

DETAILS

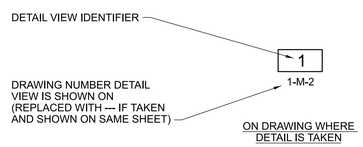

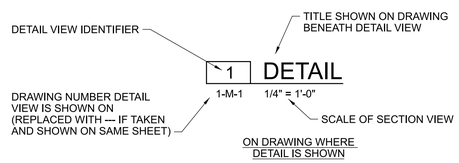

NOTES:

1. SIMILAR SYMBOLOGY IS USED FOR PARTIAL PLANS.

PHOTOS

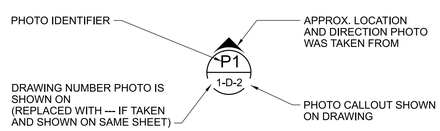

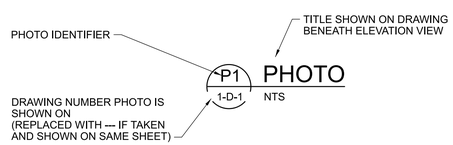

STANDARD DETAILS

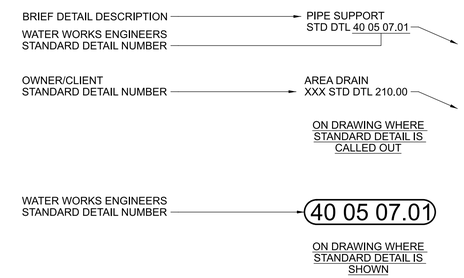

GENERAL SYMBOLOGY

	BLACK	NEW WORK WITHIN DISCIPLINE OF DRAWING
	DARK GRAY	NEW WORK OUTSIDE OF DISCIPLINE OF DRAWING ("OFF DISCIPLINE)
	LIGHT OR MEDIUM GRAY OR SCREENED	EXISTING FEATURES OR NEW WORK OUTSIDE OF DISCIPLINE OF DRAWING ("OFF DISCIPLINE")
		EXISTING STRUCTURE OR EQUIPMENT TO BE DEMOLISHED
		EXISTING PIPE OR LINEAR ELEMENT TO BE DEMOLISHED
		EXISTING PIPE OR LINEAR ELEMENT TO BE ABANDONED
		WATER SURFACE
		BREAK LINE

GENERAL NOTES

NOTES:

1. EQUIPMENT COMPONENTS OR PANELS SHOWN WITH A DOUBLE DIAMOND (♦♦) ARE TO BE PROVIDED AS PART OF A PACKAGE SYSTEM.

VERIFY SCALE

BAR IS ONE INCH ON ORIGINAL DRAWING

0 1"

IF NOT ONE INCH ON THIS SHEET, ADJUST SCALES ACCORDINGLY

NO	DATE	REVISION	BY	APVD

FOR REFERENCE ONLY
PROJECT MANAGER RFP
(NOT FOR CONSTRUCTION)

REGISTERED PROFESSIONAL ENGINEER JOSEPH A. RIESS No. C66413 CIVIL STATE OF CALIFORNIA 3/25/2024

DESIGN S. NILSEN
DRAWN J. MARTIN
CHECKED J. RIESS
APPROVED J. RIESS

WATERWORKS ENGINEERS
760 CYPRESS AVE SUITE 201, REDDING, CA. 96001

PARADISE IRRIGATION DISTRICT
WASHWATER EQUALIZER TANK REPLACEMENT PROJECT
PARADISE, CA

GENERAL
GENERAL DESIGNATIONS

DATE MARCH 2024
PROJECT NO. 22-098
DRAWING NO. G-4
SHEET NO. 4

FILENAME: L:\CAD\Projects\22-098 PID WTP Equalizer Tank Replacement\07 Drawings\2298D-G004.dgn
PLOT DATE: 3/19/2024 PLOT TIME: 7:44:43 PM

GENERAL NOTES

1. RENDERINGIS FOR ILLUSTRATION PURPOSES ONLY. SEE PLAN SHEETS FOR CONSTRUCTION DETAILS.

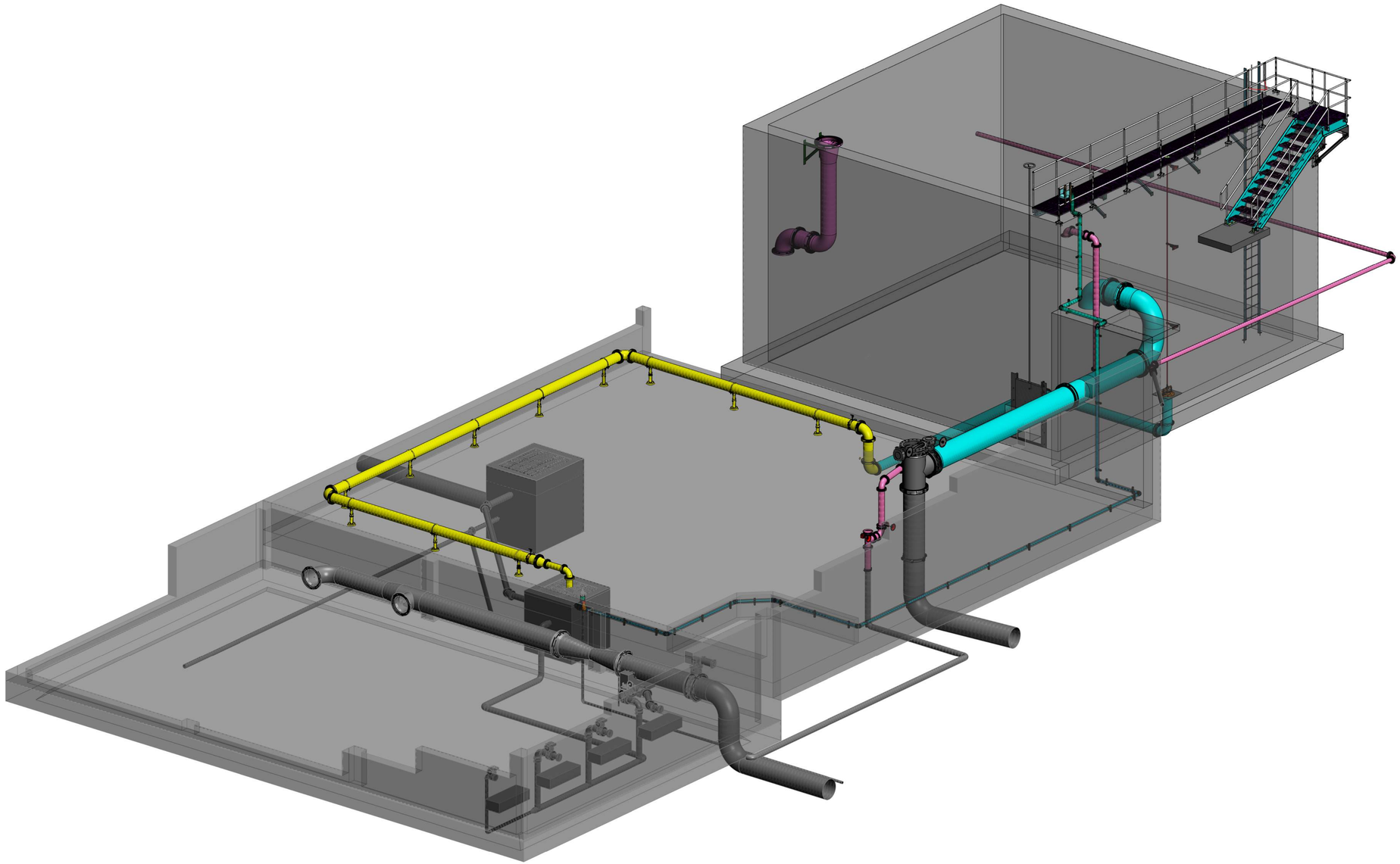

VERIFY SCALE

BAR IS ONE INCH ON ORIGINAL DRAWING

0 1"

IF NOT ONE INCH ON THIS SHEET, ADJUST SCALES ACCORDINGLY

NO	DATE	REVISION	BY	APVD

FOR REFERENCE ONLY
PROJECT MANAGER RFP
(NOT FOR CONSTRUCTION)

REGISTERED PROFESSIONAL ENGINEER
JOSEPH A. RIESS
No. C66413
CIVIL
STATE OF CALIFORNIA
3/25/2024

DESIGN J. RIESS
DRAWN J. RIESS
CHECKED J. RIESS
APPROVED J. RIESS

WATERWORKS ENGINEERS
760 CYPRESS AVE SUITE 201, REDDING, CA. 96001

PARADISE IRRIGATION DISTRICT

WASHWATER EQUALIZER TANK REPLACEMENT PROJECT

PARADISE, CA

GENERAL

PHASE 1 TANK AND TEMPORARY BYPASS PIPING RENDERING

DATE MARCH 2024
PROJECT NO. 22-098
DRAWING NO. G-5
SHEET NO. 5

FILENAME: L:\CAD\Projects\22-098 PID WTP Equalizer Tank Replacement\07 Drawings\2298D-G005.dgn

PLOT DATE: 3/19/2024 PLOT TIME: 4:49:24 AM

GENERAL NOTES

1. RENDERINGIS FOR ILLUSTRATION PURPOSES ONLY. SEE PLAN SHEETS FOR CONSTRUCTION DETAILS.

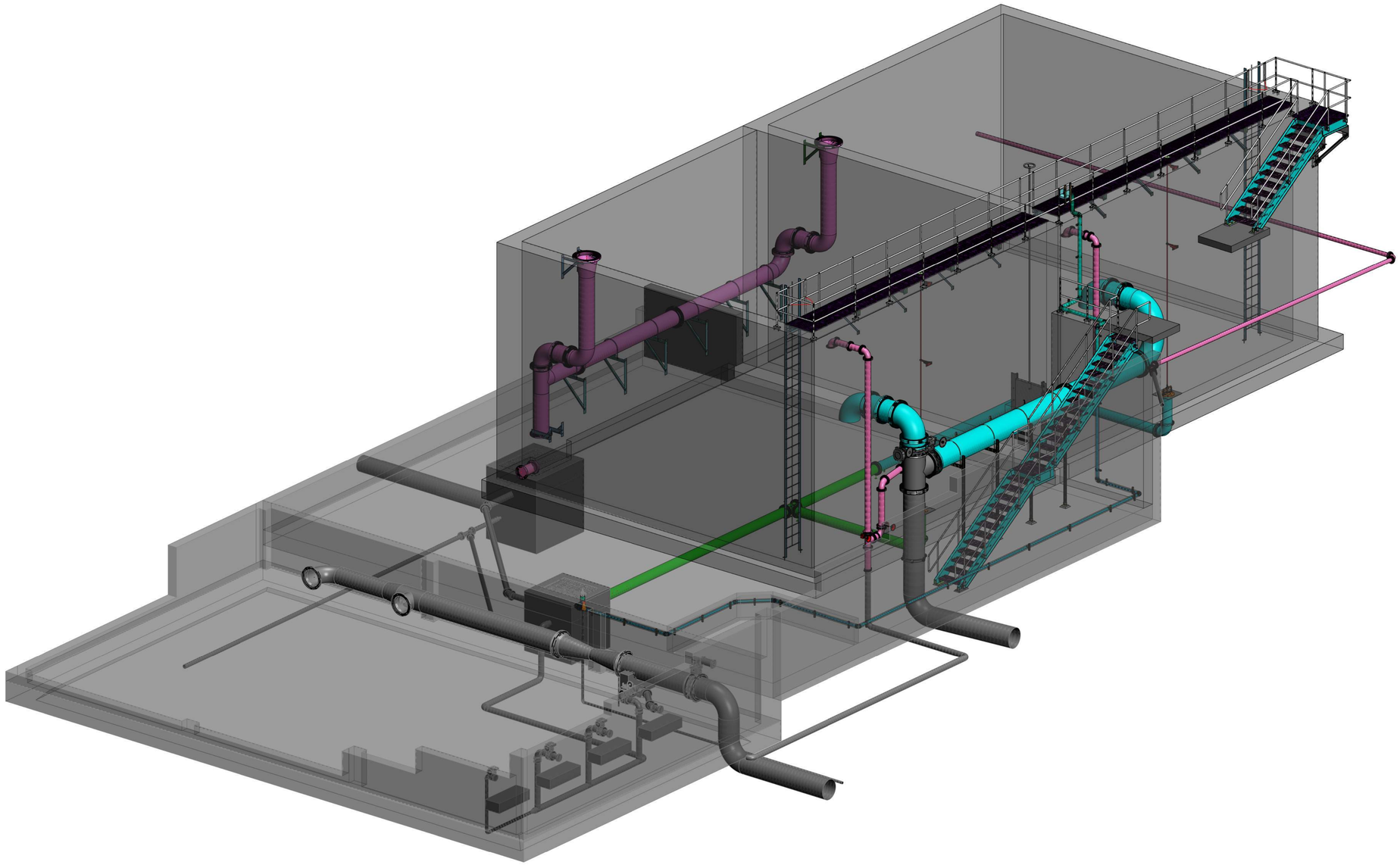

VERIFY SCALE

BAR IS ONE INCH ON ORIGINAL DRAWING

0 1"

IF NOT ONE INCH ON THIS SHEET, ADJUST SCALES ACCORDINGLY

NO	DATE	REVISION	BY	APVD

FOR REFERENCE ONLY
PROJECT MANAGER RFP
(NOT FOR CONSTRUCTION)

REGISTERED PROFESSIONAL ENGINEER JOSEPH A. RIESS No. C66413 CIVIL STATE OF CALIFORNIA 3/25/2024

DESIGN J. RIESS
DRAWN J. RIESS
CHECKED J. RIESS
APPROVED J. RIESS

WATERWORKS ENGINEERS
760 CYPRESS AVE SUITE 201, REDDING, CA. 96001

PARADISE IRRIGATION DISTRICT

WASHWATER EQUALIZER TANK REPLACEMENT PROJECT

PARADISE, CA

GENERAL

PHASE 2 TANK RENDERING

DATE MARCH 2024
PROJECT NO. 22-098
DRAWING NO. G-6
SHEET NO. 6

FILENAME: L:\CAD\Projects\22-098 PID WTP Equalizer Tank Replacement\07 Drawings\2298D-G005.dgn

PLOT DATE: 3/19/2024 PLOT TIME: 4:56:13 AM

DEMOLITION NOTES

1. CLEARING AND GRUBBING WITHIN LIMITS OF DEMOLITION PER SECTION 02200.
2. CONTRACTOR TO EXPECT NATURALLY OCCURING ASBESTOS IN THE AREA OF EXCAVATION. CONTRACTOR SHALL FOLLOW ALL REQUIRED BUTTE COUNTY RULE 270 REQUIREMENTS, CAL OSHA MITIGATION MEASURES AND CARB ASBESTOS ATCM FOR CONSTRUCTION, GRADING, QUARRYING AND SURFACE MINING OPERATIONS STANDARDS DURING EXECUTION OF THE WORK INCLUDING EXCAVATION, HANDLING, TRANSPORTATION AND DISPOSAL OF THE MATERIALS.
3. SEE SHEET 1-D-3 FOR PHASE 1 STRUCTURAL DEMOLITION PLAN
4. CONTRACTOR TO POTHOLE EXISTING UTILITIES. PROVIDE INVERT ELEVATIONS TO ENGINEER. NOTIFY ENGINEER OF ANY CONFLICTS
5. CAP END OF 12" OVER FLOW AND ABANDON.

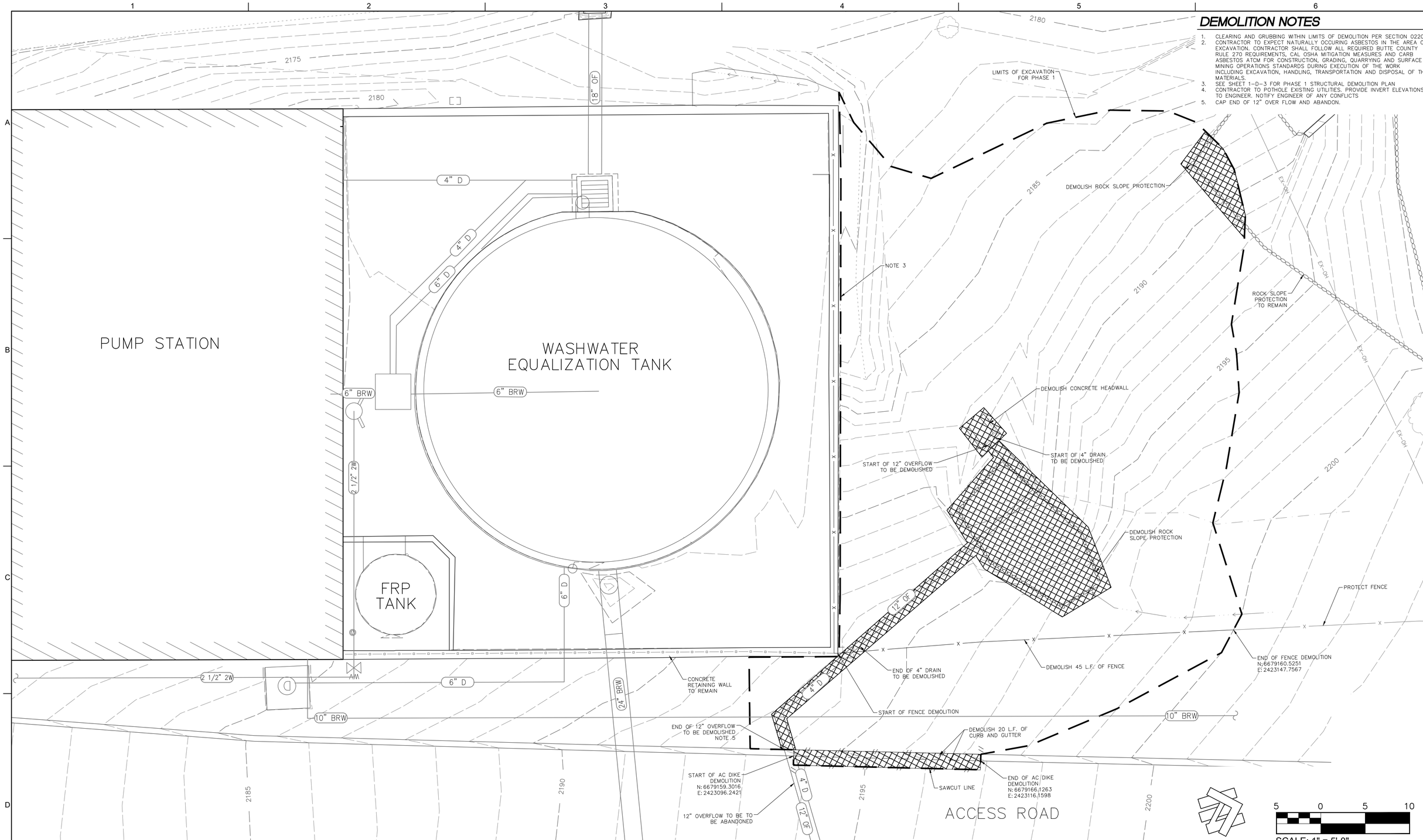

VERIFY SCALE				
BAR IS ONE INCH ON ORIGINAL DRAWING				
0 ▬ 1"				
IF NOT ONE INCH ON THIS SHEET, ADJUST SCALES ACCORDINGLY	NO	DATE	REVISION	BY	APVD

FOR REFERENCE ONLY
PROJECT MANAGER RFP
(NOT FOR CONSTRUCTION)

REGISTERED PROFESSIONAL ENGINEER RICHARD D. GUEVARA No. 82860 CIVIL STATE OF CALIFORNIA 3/25/2024

DESIGN	K. EMERY/R. GUEVARRA
DRAWN	K. EMERY
CHECKED	R. GUEVARRA
APPROVED	R. GUEVARRA

WATERWORKS ENGINEERS
REDDING, CALIFORNIA

NORTHSTAR
111 MISSION RANCH BLVD. SUITE 100, CHICO, CA 95926
PHONE: (530) 893-1600 www.northstareng.com

PARADISE IRRIGATION DISTRICT

WASHWATER EQUALIZER TANK REPLACEMENT PROJECT

PARADISE, CA

DEMOLITION

PHASE 1
SITE DEMOLITION

DATE	MARCH 2024
PROJECT NO.	22-098
DRAWING NO.	1-D-1
SHEET NO.	7

GENERAL NOTES

1. EXISTING TANK SHALL NOT BE TAKEN OFFLINE WITHOUT PRIOR APPROVAL OF OWNER. SEE SECTION 01 14 03 FOR SPECIAL PROJECT CONSTRAINTS.
2. TO STABILIZE THE EXISTING RETAINING WALL PRIOR TO DEMOLITION, TIE-BACK SOIL ANCHORS (OR APPROVED ALTERNATE SHORING METHOD) SHALL BE PROVIDED ALONG THE EAST WALL AS NECESSARY AND PER THE DESIGN CRITERIA NOTED ON DWG S-1. DESIGN OF TIE-BACK ANCHORS SHALL BE THE RESPONSIBILITY OF THE CONTRACTOR AND SHALL BE PROVIDED IN A SUBMITTAL INCLUDING DRAWINGS AND CALCULATIONS PREPARED BY A CIVIL OR STRUCTURAL ENGINEER LICENSED IN THE STATE OF CALIFORNIA. THE TIE-BACK ANCHOR SUBMITTAL MUST BE APPROVED BY ENGINEER PRIOR TO DEMOLISHING THE EXISTING RETAINING WALL.

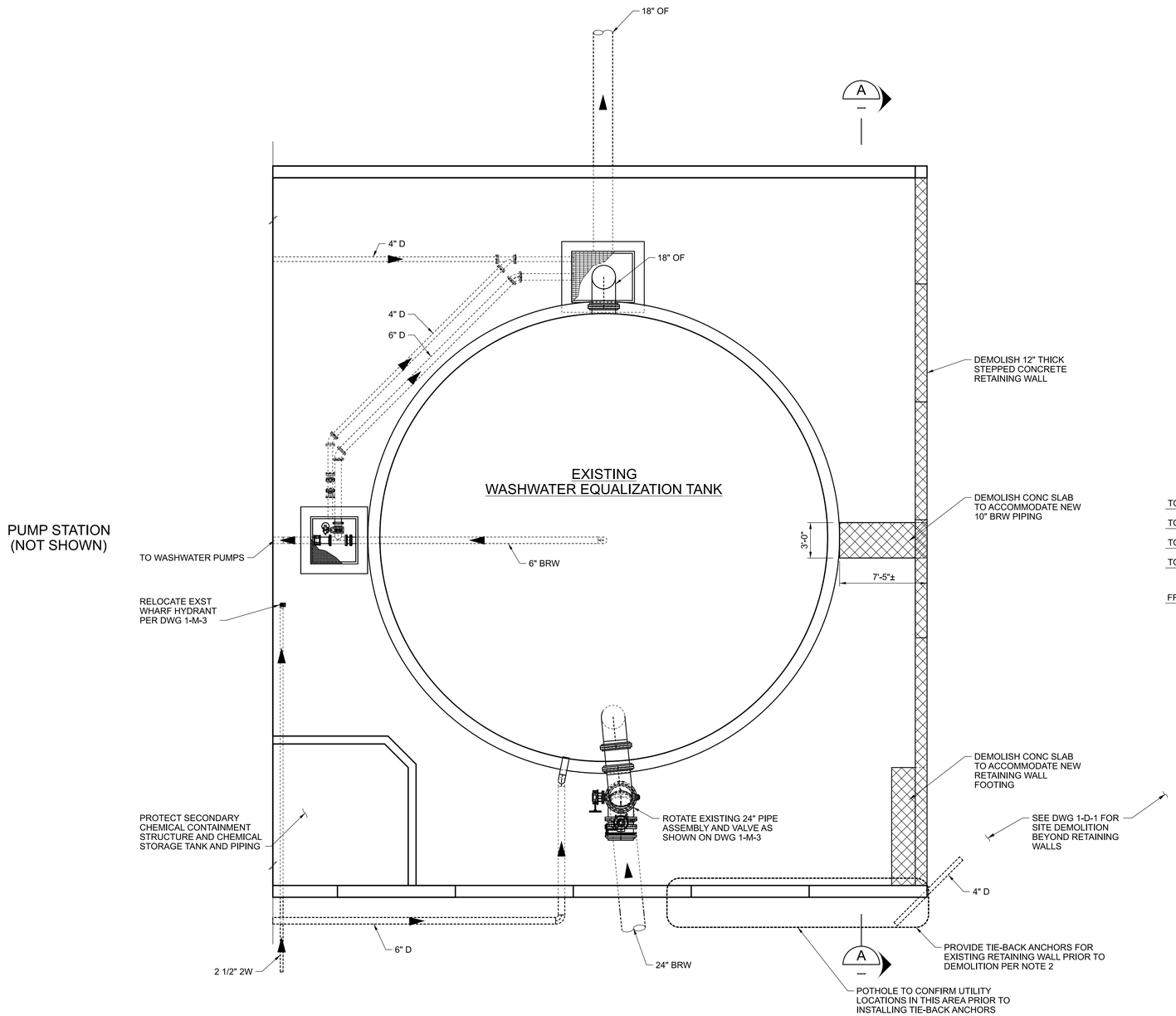

PLAN
3/16"=1'-0"

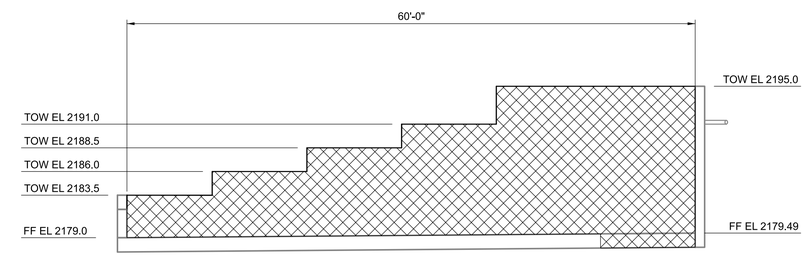

A SECTION

1/8"=1'-0"

8 0 8 16 FEET
SCALE 1/8"=1'-0"

4 0 4 8 FEET
SCALE 3/16"=1'-0"

VERIFY SCALE
BAR IS ONE INCH ON ORIGINAL DRAWING
0 1"
IF NOT ONE INCH ON THIS SHEET, ADJUST SCALES ACCORDINGLY

NO	DATE	REVISION	BY	APVD

FOR REFERENCE ONLY
PROJECT MANAGER RFP
(NOT FOR CONSTRUCTION)

REGISTERED PROFESSIONAL ENGINEER JOSEPH A. RIESS No. C66413 CIVIL STATE OF CALIFORNIA 3/25/2024

DESIGN S. NILSEN
DRAWN J. MARTIN
CHECKED J. RIESS
APPROVED J. RIESS

WATERWORKS ENGINEERS
760 CYPRESS AVE SUITE 201, REDDING, CA. 96001

PARADISE IRRIGATION DISTRICT
WASHWATER EQUALIZER TANK REPLACEMENT PROJECT
PARADISE, CA

DEMOLITION
PHASE 1
DEMOLITION PLAN AND SECTION

DATE MARCH 2024
PROJECT NO. 22-098
DRAWING NO. 1-D-2
SHEET NO. 8

FILENAME: L:\CAD\Projects\22-098 PID WTP Equalizer Tank Replacement\07 Drawings\2298D-10D102.dgn
PLOT DATE: 3/25/2024 PLOT TIME: 5:31:46 AM

GENERAL NOTES

1. PHASE 2 WORK SHOWN FOR REFERENCE.
2. EXISTING TANK SHALL NOT BE TAKEN OFFLINE WITHOUT PRIOR APPROVAL OF OWNER. SEE SECTION 01 14 03 FOR SPECIAL PROJECT CONSTRAINTS.

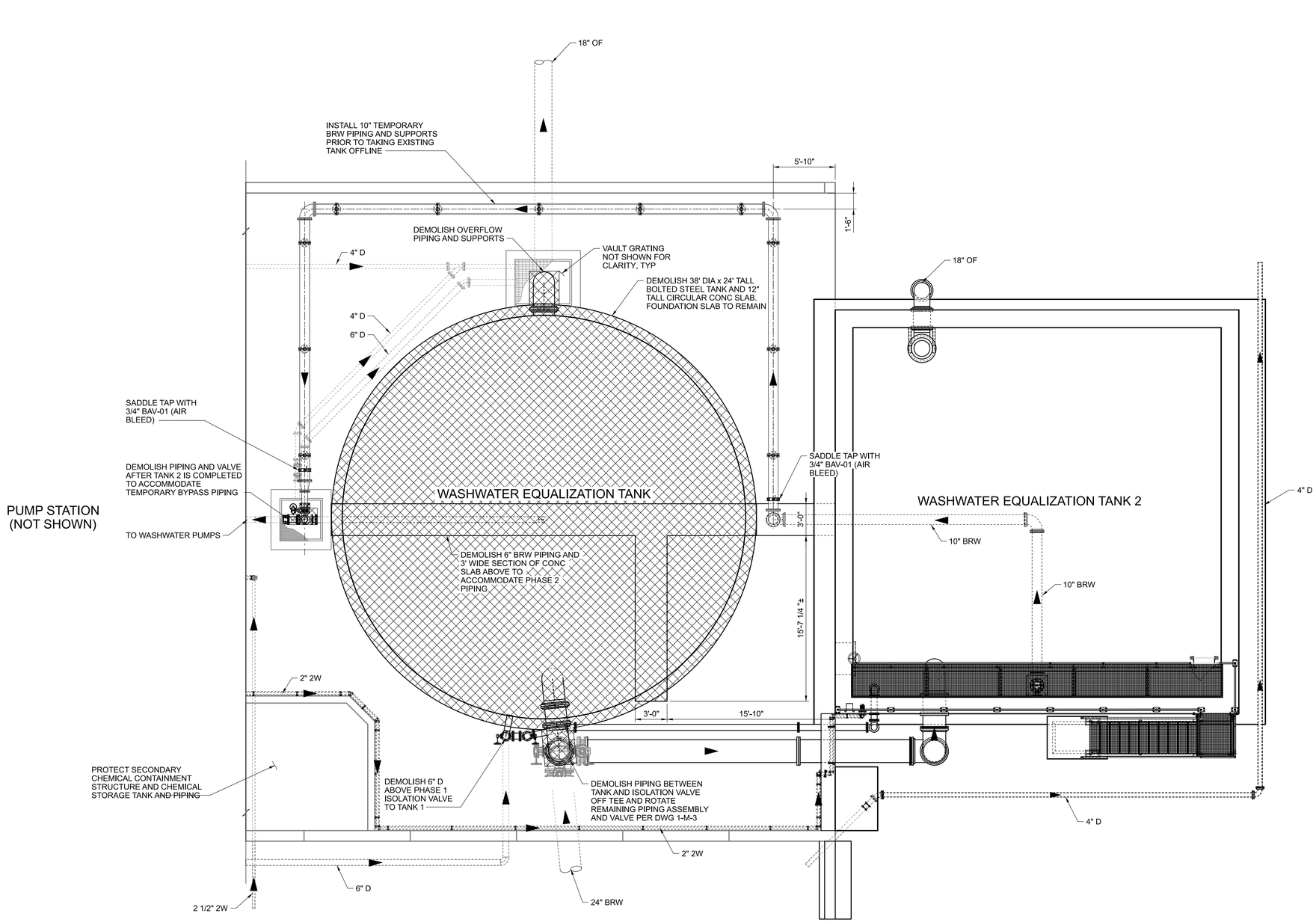

PLAN

3/16"=1'-0"

4 0 4 8 FEET

SCALE 3/16"=1'-0"

VERIFY SCALE

BAR IS ONE INCH ON ORIGINAL DRAWING

0 1"

IF NOT ONE INCH ON THIS SHEET, ADJUST SCALES ACCORDINGLY

NO	DATE	REVISION	BY	APVD

FOR REFERENCE ONLY
PROJECT MANAGER RFP
(NOT FOR CONSTRUCTION)

REGISTERED PROFESSIONAL ENGINEER JOSEPH A. RIESS No. C66413 CIVIL STATE OF CALIFORNIA 3/25/2024

DESIGN: S. NILSEN
DRAWN: J. MARTIN
CHECKED: J. RIESS
APPROVED: J. RIESS

WATERWORKS ENGINEERS
760 CYPRESS AVE SUITE 201, REDDING, CA. 96001

PARADISE IRRIGATION DISTRICT

WASHWATER EQUALIZER TANK REPLACEMENT PROJECT

PARADISE, CA

DEMOLITION

PHASE 2
DEMOLITION AND TEMPORARY BYPASS PLAN

DATE: MARCH 2024
PROJECT NO.: 22-098
DRAWING NO.: 2-D-1
SHEET NO.: 9

FILENAME: L:\CAD\Projects\22-098 PID WTP Equalizer Tank Replacement\07 Drawings\2298D-20D101.dgn

PLOT DATE: 3/25/2024 PLOT TIME: 3:07:40 AM

LEGEND

- NORTHSTAR CONTROL POINT
- EXISTING STORM DRAIN MANHOLE
- EXISTING STORM DRAIN INLET
- EXISTING HYDRANT
- EXISTING AREA DRAIN
- EXISTING WATER VALVE
- EXISTING UTILITY VAULT/BOX AS NOTED
- EXISTING UTILITY POLE
- EXISTING STREET LIGHT
- XX" EXISTING TREE WITH SIZE AS NOTED
- EXISTING BUILDING
- EXISTING EDGE OF PAVEMENT
- EXISTING RIPRAP
- X EXISTING FENCE
- EXISTING GUARD RAIL
- SD EXISTING UNDERGROUND STORM DRAIN
- EX-W EXISTING UNDERGROUND WATER LINE
- E-OH EXISTING OVERHEAD UTILITY
- EXISTING TOP OF BANK
- EXISTING TOE OF BANK
- EXISTING GRADE BREAK
- EXISTING FLOWLINE
- 2180 EXISTING MAJOR CONTOUR AT 5' INTERVALS
- EXISTING MINOR CONTOUR AT 1' INTERVALS
- EXISTING EQ TANK PIPING
- 10" D PROPOSED EQ TANK PIPING
- PROPOSED SAWCUT LINE
- PROPOSED FLOWLINE
- PROPOSED PIPE TO BE ABADONED
- X PROPOSED FENCE LINE
- 2185 PROPOSED MAJOR CONTOUR AT 5' INTERVALS
- PROPOSED MINOR CONTOUR AT 1' INTERVALS
- PROPOSED RIPRAP BOUNDARY
- PROPOSED LIMIT OF DEMOLITON
- PROPOSED CONCRETE
- PROPOSED RETAINING WALL
- PROPOSED ASPHALT CONCRETE

GENERAL NOTES

1. ALL WORK IN THE PUBLIC RIGHT OF WAY SHALL BE DONE IN ACCORDANCE WITH BUTTE COUNTY IMPROVEMENT STANDARDS AND SPECIFICATIONS, AND APPLICABLE PORTIONS OF THE STATE OF CALIFORNIA DEPARTMENT OF TRANSPORTATION STANDARD PLANS AND SPECIFICATIONS DATED 2018.
2. PRIOR TO THE START OF CONSTRUCTION THE CONTRACTOR SHALL BE RESPONSIBLE FOR CONTACTING ALL UTILITY COMPANIES AND/OR UTILITY DISTRICTS AS TO THE LOCATION OF ALL UNDERGROUND FACILITIES. THE CONTRACTOR SHALL BE RESPONSIBLE FOR THE LOCATION OF ALL UNDERGROUND FACILITIES OR OTHER BURIED OBJECTS WHICH MAY BE ENCOUNTERED BUT WHICH ARE NOT SHOWN ON THESE PLANS. THE CONTRACTOR SHALL CALL UNDERGROUND SERVICE ALERT (USA) AT 811 AT LEAST 3 DAYS PRIOR TO CONSTRUCTION.
3. LOCATIONS AND DEPTHS OF EXISTING UTILITIES SHOWN ON THESE PLANS ARE APPROXIMATE. THE CONTRACTOR SHALL VERIFY THE EXISTENCE, LOCATION AND DEPTH OF ALL UTILITIES PRIOR TO ORDERING MATERIALS OR BEGINNING SITE CONSTRUCTION.
4. NORTHSTAR ASSUMES NO RESPONSIBILITY FOR ANY WORK CONSTRUCTED IF STAKED BY OTHERS.
5. PRIOR TO ANY CORRECTIVE ACTION BY THE CONTRACTOR WHICH IS NECESSARY DUE TO STAKING ERRORS, THE CONTRACTOR SHALL NOTIFY THE ENGINEER FOR FOR RE-STAKING AND VERIFICATION OF PREVIOUS STAKING. THE ENGINEER ASSUMES NO LIABILITY FOR THE COST INCURRED FOR THIS WORK.
6. CONTRACTOR TO BE RESPONSIBLE FOR THE PROTECTION OF ALL EXISTING MONUMENTS AND OTHER SURVEY MARKERS DURING CONSTRUCTION. ALL SUCH MONUMENTS OR MARKERS DESTROYED DURING CONSTRUCTION SHALL BE REPLACED AT CONTRACTOR'S EXPENSE.
7. ALL PERMITS NECESSARY FOR THIS JOB ARE TO BE ACQUIRED BY THE CONTRACTOR.
8. THE CONTRACTOR SHALL BE RESPONSIBLE FOR VERIFICATION OF ALL ESTIMATES AND QUANTITIES.
9. SHOULD CONSTRUCTION ACTIVITIES EXPOSE BURIED ARTIFACTS OR OTHER EVIDENCE OF EARLY HISTORIC OCCUPATION. A QUALIFIED ARCHAEOLOGIST SHALL BE CONTACTED IMMEDIATELY. ALL CONSTRUCTION ACTIVITIES SHALL BE HALTED UNTIL THE ARCHAEOLOGIST'S RECOMMENDATIONS ARE IMPLEMENTED.

ABBREVIATIONS

AGGREGATE BASE	AB
ASPHALT CONCRETE	AC
BEGIN CURVE	BC
BACK OF WALK	BOW
BACKWASH RESIDUAL WASTE	BRW
BUILDING SETBACK LINE	BSL
BACKWASH SUPPLY WATER	BSW
BEGIN VERTICAL CURVE	BVC
CURVE #	C
CABLE TELEVISION	CATV
CATCH BASIN	CB
COMPOUND CURVE	CC
CURB AND GUTTER	CG
CENTERLINE	CL
CORREGATED METAL PIPE	CMP
CONCRETE MASONRY UNIT	CMU
CLEAN OUT	CO
CUBIC YARDS	CU
DRAIN	D
DRAIN INLET	DI
ELECTRIC	E
END CURVE	EC
EXISTING GROUND	EG
ELEVATION	ELEV
EDGE OF PAVEMENT	EP
END VERTICAL CURVE	EVC
EXISTING	EX
FUTURE	F
FINISH FLOOR	FF
FINISH GRADE	FG
FIRE HYDRANT	FH
FLOWLINE	FL
FACE OF CURB	FOC
FEET	FT
GAS	G
GAUGE	GA
GRADE BREAK	GB
GAS METER	GM
HANDICAP RAMP	HCRAMP
HIGH DENSITY POLYETHYLENE	HDPE
INVERT ELEVATION	IE
JOINT POLE	JP
JOINT TRENCH	JT
LINE #	L
LATERAL	LAT
LINEAR FEET	LF
LIP OF GUTTER	LIP
LOT LINE	LL
LEFT	LT
MAXIMUM	MAX
MAXIMUM DRY DENSITY	MDD
MAINTENANCE HOLE	MH
MINIMUM	MIN
MID POINT	MP
MID POINT ON CURVE	MPOC
NOT TO SCALE	NTS
OVER FLOW	OF
ORIGINAL GROUND	OG
OVERHEAD ELECTRIC	OHE
OFFSET	OS
PROPERTY CORNER	PC
PORTLAND CEMENT CONCRETE	PCC
PHASE NUMBER	PH
POINT OF INTERSECTION	PI
PROPERTY LINE	PL
POWER POLE	PP
POINT OF REVERSE CURVATURE	PRC
PUBLIC STORM DRAIN EASEMENT	PSDE
PUBLIC SANITARY SEWER EASEMENT	PSSE
POINT OF TANGENCY	PT
PUBLIC UTILITY EASEMENT	PUE
POLYVINALCHLORIDE	PVC
POINT OF VERTICAL INTERSECTION	PVI
RADIUS	R
REINFORCED CONCRETE PIPE	RCP
RELATIVE DENSITY	RD
RETURN	RET
RIGHT-OF-WAY	ROW
ROCK SLOPE PROTECTION	RSP
RIGHT	RT
SLOPE	S
STORM DRAIN	SD
STORM DRAIN MAINTENANCE HOLE	SDMH
SERVICE	SERV
SUB GRADE	SG
SANITARY SEWER	SS
SANITARY SEWER MAINTENANCE HOLE	SSMH
STATION	STA
STANDARD	STD
SIDEWALK	SW
TRANSFORMER	T
TOP BACK OF CURB	TBC
TOP OF CURB	TC
TELEPHONE	TEL
TOE OF SLOPE	TOE
TOP OF SLOPE	TOP
TOP OF WALL	TW
TYPICAL	TYP
VITRIFIED CLAY PIPE	VCP
VALLEY GUTTER	VG
WATER	W
WATER METER	WM
YARDS	YDS

VERIFY SCALE

BAR IS ONE INCH ON ORIGINAL DRAWING

0 1"

IF NOT ONE INCH ON THIS SHEET, ADJUST SCALES ACCORDINGLY

NO	DATE	REVISION	BY	APVD

FOR REFERENCE ONLY
PROJECT MANAGER RFP
(NOT FOR CONSTRUCTION)

REGISTERED PROFESSIONAL ENGINEER RICARDO D. GUEVARRA No. 82860 CIVIL STATE OF CALIFORNIA 3/25/2024

DESIGN: K. EMERY/R. GUEVARRA
DRAWN: K. EMERY
CHECKED: R. GUEVARRA
APPROVED: R. GUEVARRA

WATERWORKS ENGINEERS
REDDING, CALIFORNIA

NORTHSTAR
111 MISSION RANCH BLVD. SUITE 100, CHICO, CA 95926
PHONE: (530) 893-1600 www.northstareng.com

PARADISE IRRIGATION DISTRICT
WASHWATER EQUALIZER TANK REPLACEMENT PROJECT
PARADISE, CA

CIVIL
LEGEND, NOTES AND ABBREVATIONS

DATE: MARCH 2024
PROJECT NO. 22-098
DRAWING NO. C-1
SHEET NO. 10

TOPOGRAPHIC SURVEY NOTES

1. THIS IS NOT A BOUNDARY SURVEY. NO LIABILITY IS ASSUMED BY NORTHSTAR FOR THE EXISTENCE OF ANY EASEMENTS, ENCUMBRANCES AND DISCREPANCIES IN BOUNDARY OR TITLE DEFECTS.
2. PHYSICAL ITEMS SHOWN ON THIS TOPOGRAPHIC SURVEY ARE LIMITED TO THOSE ITEMS VISIBLE BY SURFACE INSPECTION AS OF THE DATE OF THIS SURVEY. SUBSURFACE STRUCTURES, IF ANY, ARE NOT SHOWN.
3. THE TYPES, LOCATIONS, SIZES AND/OR DEPTHS OF EXISTING UNDERGROUND UTILITIES AS SHOWN ON THIS TOPOGRAPHIC SURVEY WERE OBTAINED FROM SURFACE FEATURES AND SOURCES OF VARYING RELIABILITY. ONLY ACTUAL EXCAVATION WILL REVEAL THE TYPES, EXTENT, SIZES, LOCATIONS AND DEPTHS OF SUCH UNDERGROUND UTILITIES. NORTHSTAR ASSUMES NO RESPONSIBILITY FOR THE COMPLETENESS OR ACCURACY OF THE DELINEATION OF SUCH UNDERGROUND UTILITIES WHICH MAY BE ENCOUNTERED.
4. BENCHMARK: GDA POINT HV-12, L&L SURVEY POINT #18, BEING AN RAILROAD SPIKE IN AERIAL TARGET LOCATED AT THE SOUTHWESTERLY SIDE OF TANK IN THE WATER TREATMENT FACILITY, ELEVATION = 2209.45 (NGVD 29). POINT #154 PER THIS SURVEY.
5. THIS SURVEY IS BASED UPON THE CALIFORNIA COORDINATE SYSTEM OF 1983, CCS83, ZONE 2, EPOCH 2010.0000, ESTABLISHED LOCALLY BY A POST-PROCESSED ONSS SURVEY. DISTANCES SHOWN HEREON, OR DERIVED BY INVERSING COORDINATES HEREIN, ARE IN TERMS OF THE U.S. SURVEY FOOT AND ARE CCS83 GRID DISTANCES. TO OBTAIN LOCAL GROUND DISTANCES DIVIDE BY THE PROJECT AVERAGE COMBINED FACTOR OF 0.99989164.
6. FIELD SURVEY COMPLETED ON JULY 11, 2023
7. FIELD CHECK COMPLETED ON JULY 25, 2023
8. AERIAL IMAGERY SHOWN HEREON IS CURRENT AS OF 3-12-21

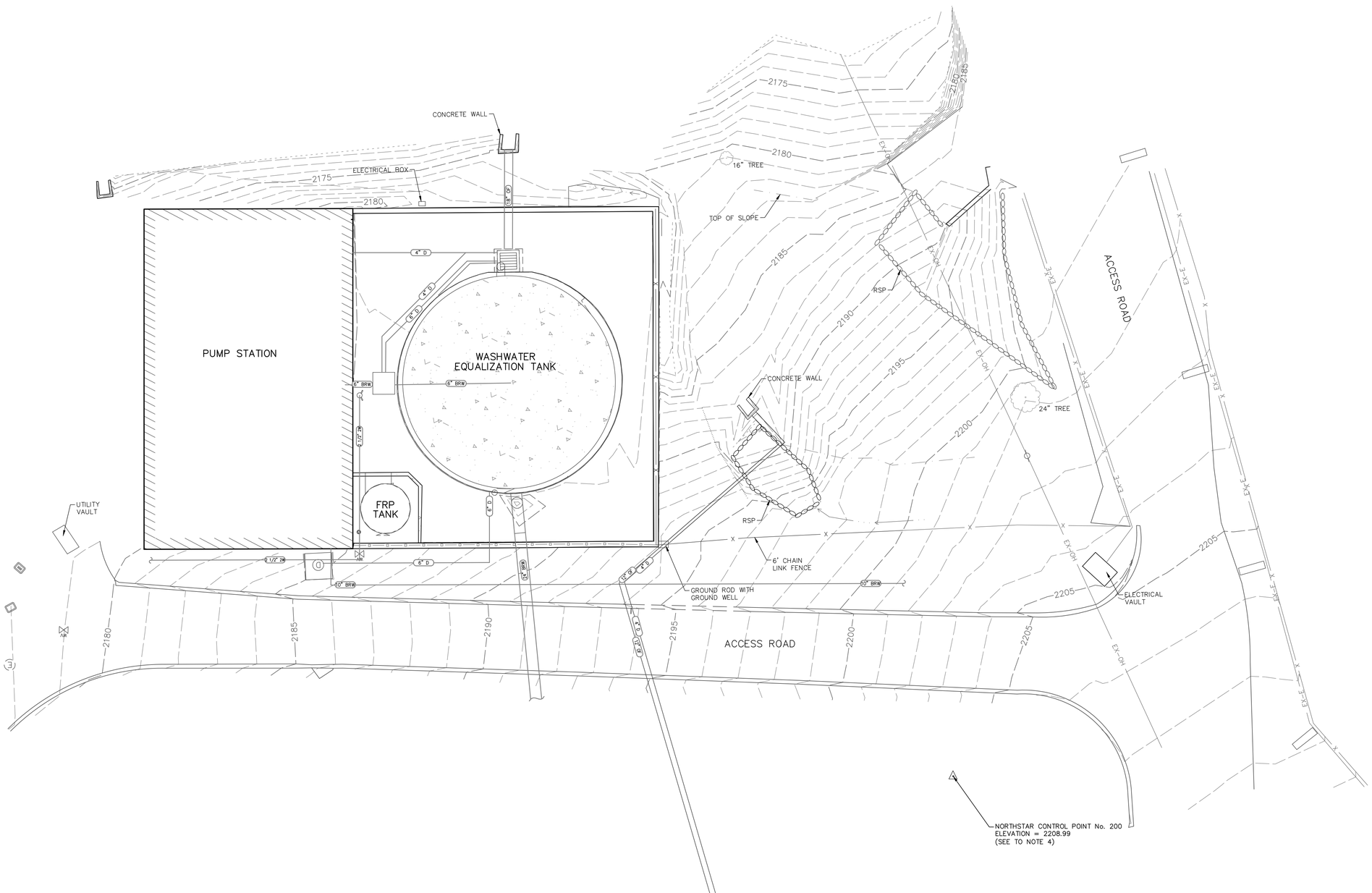

10 0 10 20

SCALE: 1" = 10'-0"

VERIFY SCALE

BAR IS ONE INCH ON ORIGINAL DRAWING

0 1"

IF NOT ONE INCH ON THIS SHEET, ADJUST SCALES ACCORDINGLY

NO	DATE	REVISION	BY	APVD

FOR REFERENCE ONLY
PROJECT MANAGER RFP
(NOT FOR CONSTRUCTION)

REGISTERED PROFESSIONAL ENGINEER RICHARD D. GUEVARRA No. 82860 CIVIL STATE OF CALIFORNIA 3/25/2024

DESIGN: K. EMERY/R. GUEVARRA
DRAWN: K. EMERY
CHECKED: R. GUEVARRA
APPROVED: R. GUEVARRA

WATERWORKS ENGINEERS
REDDING, CALIFORNIA

NORTHSTAR
111 MISSION RANCH BLVD, SUITE 100, CHICO, CA 95926
PHONE: (530) 893-1600 www.northstareng.com

PARADISE IRRIGATION DISTRICT

WASHWATER EQUALIZER TANK REPLACEMENT PROJECT

PARADISE, CA

CIVIL

EXISTING SITE PLAN

DATE: MARCH 2024
PROJECT NO.: 22-098
DRAWING NO.: C-2
SHEET NO.: 11

GENERAL NOTES

1. STRETCH NEW CHAIN LINK TO EXISTING FENCE POST AT END LOCATION. TIE IN THE TOP RAIL AND 3-STRAND BARBED WIRE TO THE EXISTING HANGER AND FENCE POST

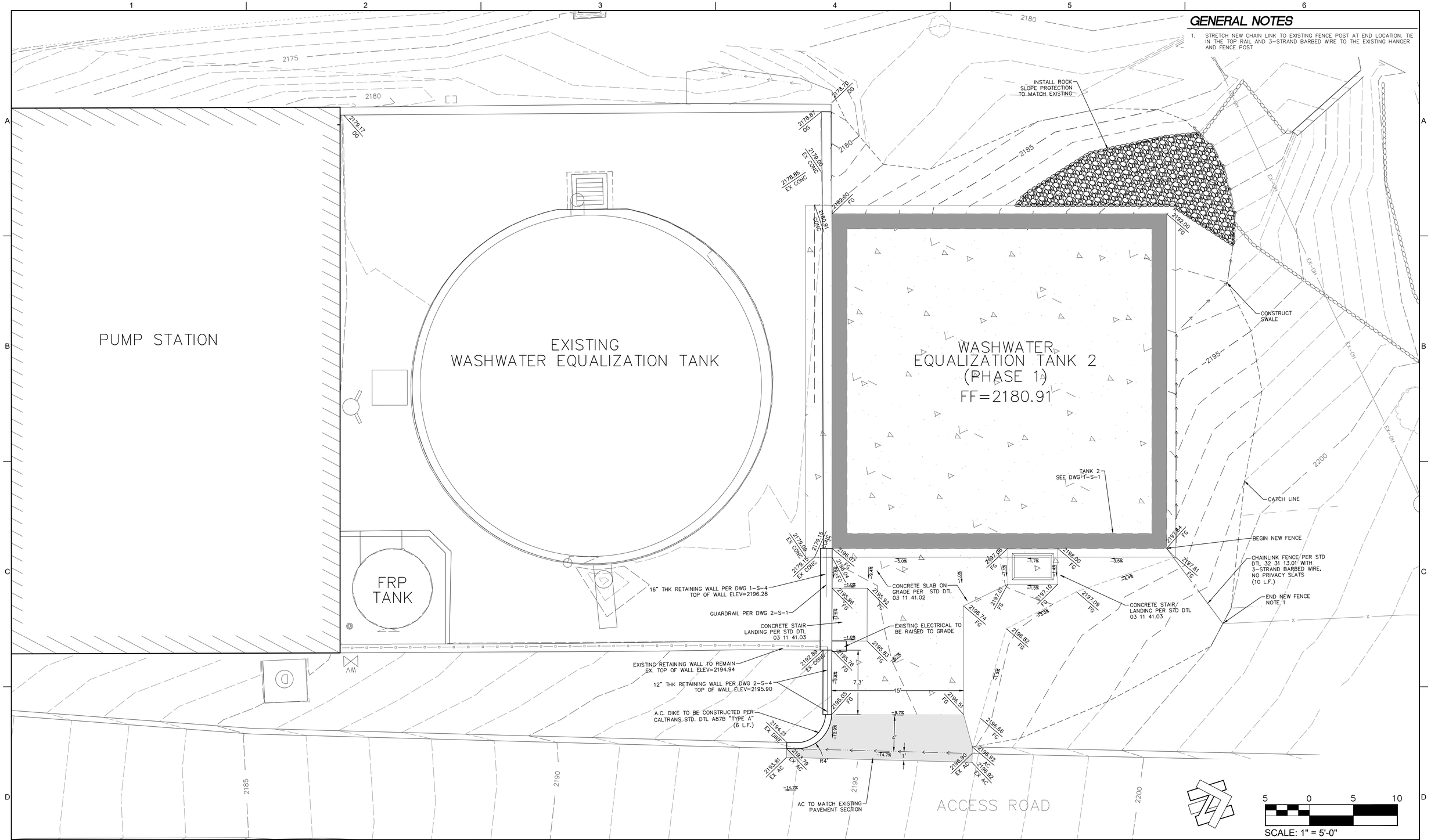

VERIFY SCALE	NO	DATE	REVISION	BY	APVD
BAR IS ONE INCH ON ORIGINAL DRAWING					
0 1"					
IF NOT ONE INCH ON THIS SHEET, ADJUST SCALES ACCORDINGLY					

FOR REFERENCE ONLY
PROJECT MANAGER RFP
(NOT FOR CONSTRUCTION)

REGISTERED PROFESSIONAL ENGINEER
RICHARD D. GUEVARRA
No. 82860
CIVIL
STATE OF CALIFORNIA
3/25/2024

DESIGN	K. EMERY/R. GUEVARRA
DRAWN	K. EMERY
CHECKED	R. GUEVARRA
APPROVED	R. GUEVARRA

WATERWORKS ENGINEERS
REDDING, CALIFORNIA

NORTHSTAR
111 MISSION RANCH BLVD. SUITE 100, CHICO, CA 95926
PHONE: (530) 893-1600 www.northstareng.com

PARADISE IRRIGATION DISTRICT

WASHWATER EQUALIZER TANK REPLACEMENT PROJECT

PARADISE, CA

CIVIL

PHASE 1
GRADING PLAN

DATE	MARCH 2024
PROJECT NO.	22-098
DRAWING NO.	1-C-1
SHEET NO.	12

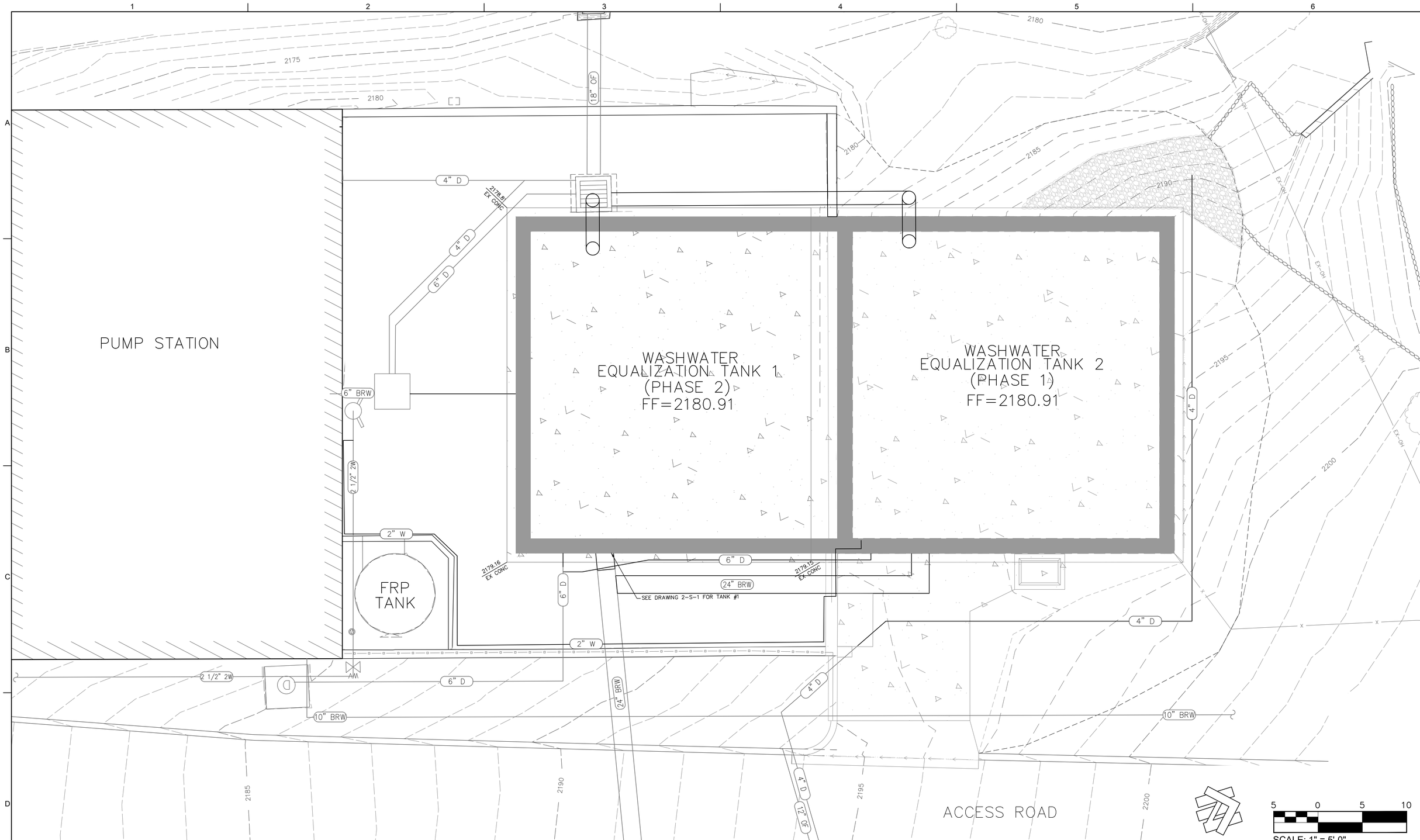

VERIFY SCALE

BAR IS ONE INCH ON ORIGINAL DRAWING

0 1"

IF NOT ONE INCH ON THIS SHEET, ADJUST SCALES ACCORDINGLY

NO	DATE	REVISION	BY	APVD

FOR REFERENCE ONLY
PROJECT MANAGER RFP
(NOT FOR CONSTRUCTION)

REGISTERED PROFESSIONAL ENGINEER RICHARD D. GUEVARRA No. 82860 CIVIL STATE OF CALIFORNIA 3/25/2024

DESIGN: K. EMERY/R. GUEVARRA
DRAWN: K. EMERY
CHECKED: R. GUEVARRA
APPROVED: R. GUEVARRA

WATERWORKS ENGINEERS
REDDING, CALIFORNIA

NORTHSTAR
111 MISSION RANCH BLVD. SUITE 100, CHICO, CA 95926
PHONE: (530) 893-1600 www.northstareng.com

PARADISE IRRIGATION DISTRICT

WASHWATER EQUALIZER TANK REPLACEMENT PROJECT

PARADISE, CA

CIVIL

PHASE 2
OVERALL PLAN

DATE: MARCH 2024
PROJECT NO.: 22-098
DRAWING NO.: 2-C-1
SHEET NO.: 13

STRUCTURAL ABBREVIATIONS

ABBREVIATION	DEFINITION
AB	AGGREGATE BASE, ANCHOR BOLT
ADH AB	ADHESIVE ANCHOR BOLT
BF	BLIND FLANGE, BOTTOM FACE
BM	BEAM
C	CHANNEL (BEAM)
C to C, CC	CENTER TO CENTER
CJ	CONSTRUCTION JOINT, CONTRACTION JOINT
CLG	CEILING
CMU	CONCRETE MASONRY UNIT
COL	COLUMN
d	PENNY (NAIL LENGTH)
DBA	DEFORMED BAR ANCHOR, A-WEIGHTED DECIBELS
DF	DOUGLAS FIR/LARCH
EF	EACH FACE
EQL SP	EQUALLY SPACED
EW	EACH WAY
EWEF	EACH WAY, EACH FACE
EXP JT	EXPANSION JOINT
FB	FLAT BAR
FDN	FOUNDATION
FLH	FLAT HEAD
FNSH	FINISH
FOC	FACE OF CONCRETE
FS	FINISHED SURFACE
FTG	FOOTING
GRTG	GRATING
HDR	HEADER
HDW	HARDWARE
HGT	HEIGHT
HM	HOLLOW METAL
HORIZ	HORIZONTAL
HPT	HIGH POINT
HR	HANDRAIL
HSS	HOLLOW STRUCTURAL STEEL
IE	INVERT ELEVATION
IF	INSIDE FACE
IR	IRON ROD
JT	JOINT
KIP	THOUSAND POUNDS
LAT'L	LATERAL
LG	LONG
LONG	LONGITUDINAL
MCJ	MASONRY CONTROL JOINT
MSNRY	MASONRY
MSP	MANUAL OF STANDARD PRACTICE
MTL	MATERIAL
O TO O	OUT TO OUT
OC	ON CENTER
OMRF	ORDINARY MOMENT RESISTING FRAME
OPNG	OPENING
OPP	OPPOSITE
PENT	PENETRATION
PJF	PREMOLDED JOINT FILLER
PLYWD	PLYWOOD
PRCST	PRECAST
RC	REINFORCED CONCRETE
REINF	REINFORCE, REINFORCED, REINFORCING
RO	ROUGH OPENING, REVERSE OSMOSIS
RST	REINFORCING STEEL
S	I-BEAM
SAT	SUSPENDED ACOUSTIC TILE
SLP	SLOPE
SP	SPACE, SPACES
STIF	STIFFENER
SUBFL	SUBFLOOR
SYMM	SYMMETRICAL
T&B	TOP AND BOTTOM
T&G	TONGUE AND GROOVE
TF	TOP FACE
TOC	TOP OF CURB, TOP OF CONCRETE
TOF	TOP OF FOOTING
TOW	TOP OF WALL
TRANSV	TRANSVERSE
TS	TUBE STEEL
TST	TOP OF STEEL
VPS	VENEER PLASTER SYSTEM
W	WIDE FLANGE (BEAM)
W SH ST	WEATHERING SHEET STEEL
WD	WOOD
WS	WATER STOP
WT	WATER TIGHT
WWF	WELDED WIRE FABRIC

DESIGN CRITERIA:

1. APPLICABLE CODE: 2022 CALIFORNIA BUILDING CODE (CBC), (2021 INTERNATIONAL BUILDING CODE AS AMENDED BY THE STATE OF CALIFORNIA).

2. REFER TO THE SPECIFICATIONS FOR ADDITIONAL AND SPECIFIC STRUCTURAL LOADINGS AND REQUIREMENTS.

3. WIND LOAD:
   - RISK CATEGORY — IV
   - BASIC WIND SPEED (ASCE 7-16) — 105 mph
   - EXPOSURE CATEGORY — C
   - DESIGN METHOD — DIRECTIONAL PROCEDURE

4. SEISMIC LOAD:
   - RISK CATEGORY — IV
   - IMPORTANCE FACTOR I_e — 1.5
   - S_S: 0.90 — S_{DS}: 0.66
   - S_1: 0.28 — S_{D1}: 0.27
   - SITE CLASS — C
   - SEISMIC DESIGN CATEGORY — D

5. LATERAL FORCE RESISTING SYSTEM:
   - RECTANGULAR LIQUID CONTAINING REINFORCED CONCRETE TANKS
     - ANALYSIS PROCEDURE - ACI 350.3-06 & ASCE 7-16 CHAPTER 15
     - R_x = 1.0, R_i = 3.0

GENERAL INFORMATION:

1. ALL CONSTRUCTION SHALL CONFORM TO THE LATEST EDITION OF THE BUILDING CODE.

2. DESIGN DETAILS ARE INTENDED TO BE TYPICAL AND SHALL APPLY TO ALL SIMILAR SITUATIONS OCCURRING THROUGHOUT THE PROJECT, WHETHER OR NOT THEY ARE KEYED IN EACH LOCATION. CONSULT THE ENGINEER FOR REVIEW PRIOR TO CONSTRUCTION.

3. VERIFY ALL OPENING DIMENSIONS IN WALLS, SLABS, AND DECKS WITH THE ARCHITECTURAL, MECHANICAL, HVAC AND ELECTRICAL DRAWINGS.

4. FOR NUMBER, TYPE, SIZE, ARRANGEMENT, AND/OR LOCATION OF EQUIPMENT PADS AND OPENINGS SEE ARCHITECTURAL, MECHANICAL, ELECTRICAL, HVAC AND PLUMBING DRAWINGS. COORDINATE ALL OPENINGS AND EQUIPMENT PADS WITH OTHER DISCIPLINES AND EQUIPMENT SUPPLIERS PRIOR TO PLACING SLABS, WALLS AND FOUNDATIONS.

5. NO STRUCTURAL MEMBER SHALL BE CUT FOR PIPES, DUCTS, ETC UNLESS SPECIFICALLY DETAILED OR APPROVED IN WRITING BY THE ENGINEER.

6. TIE-BACK SOIL ANCHOR SYSTEM:
   - ROCK UNCONFINED COMPRESSIVE STRENGTH (Su) = 4,500 PSI
   - ANALYSIS PROCEDURES PER POST-TENSIONING INSTITUTE RECOMMENDATIONS FOR PRESTRESSED ROCK AND SOIL ANCHORS ANDTRANSPORTATION RESEARCH BOARD (2012)

FOUNDATIONS:

1. IN ACCORDANCE WITH THE GEOTECHNICAL INVESTIGATION REPORT #2201.0155 BY BAJADA GEOSCIENCES, FOUNDATIONS HAVE BEEN DESIGNED FOR THE FOLLOWING VALUES:
   - ALLOWABLE BEARING, DEAD + LIVE LOADS — 4000 psf
   - MINIMUM FOOTING EMBEDMENT — 18 INCHES
   - LATERAL EARTH PRESSURES (DRAINED)
     - ACTIVE — 80 pcf (2:1 SLOPE, AT-REST)
     - PASSIVE — 390 pcf
   - SLIDING FRICTION COEFFICIENT — 0.4

2. THE CONTRACTOR SHALL PROVIDE THE ENGINEER AT LEAST 48 BUSINESS HOURS NOTICE FOLLOWING EXCAVATION FOR FOUNDATIONS AND PRIOR TO THE PLACEMENT OF FORMWORK, REINFORCING STEEL AND CONCRETE.

FORMWORK, SHORING AND BRACING:

1. THE STRUCTURES SHOWN ON THE DRAWINGS HAVE BEEN DESIGNED FOR STABILITY UNDER FINAL CONDITIONS ONLY. THE DESIGN SHOWN DOES NOT INCLUDE THE NECESSARY COMPONENTS OR EQUIPMENT FOR THE STABILITY OF THE STRUCTURE DURING CONSTRUCTION. THE CONTACTOR IS RESPONSIBLE FOR ALL WORK RELATING TO CONSTRUCTION ERECTION METHODS, BRACING, SHORING, RIGGING, GUYS SCAFFOLDING, FORMWORK, AND OTHER WORK AIDS REQUIRED TO SAFELY PERFORM THE WORK SHOWN. CONSTRUCTION OF SHORING AND BRACING OF FORMWORK SHALL BE IN ACCORDANCE WITH ACI 347 "GUIDE TO FORMWORK FOR CONCRETE".

CONCRETE:

1. STRUCTURAL CONCRETE SHALL HAVE A MINIMUM COMPRESSIVE STRENGTH OF 5,000 PSI AT 28 DAYS AND A SLUMP AS SPECIFIED IN SECTION 03 30 03 - CAST-IN-PLACE CONCRETE.

2. THE CONTRACTOR SHALL SUBMIT THE CONCRETE MIX DESIGNS TO THE ENGINEER FOR REVIEW AND APPROVAL PRIOR TO USE.

3. HORIZONTAL CONSTRUCTION JOINTS SHALL BE PREPARED TO EXPOSE CLEAN, SOLIDLY EMBEDDED AGGREGATE OVER THE ENTIRE JOINT INTERFACE.

4. PLACEMENT OF PIPES, CONDUITS OR OTHER EMBEDDED ITEMS IN THE CONCRETE SHALL BE IN ACCORDANCE WITH THESE DRAWINGS OR SHALL BE APPROVED BY THE ENGINEER.

5. NO ALUMINUM OR ANY OTHER MATERIAL INJURIOUS TO CONCRETE SHALL BE EMBEDDED IN THE CONCRETE.

6. CONCRETE SHALL BE MIXED AND DELIVERED IN ACCORDANCE WITH ASTM C94.

7. THE REQUIREMENTS FOR CONCRETE MIXES, PLACING, TESTING AND CURING ARE CONTAINED IN THE PROJECT SPECIFICATIONS.

8. PORTLAND CEMENT SHALL CONFORM TO ASTM C150 TYPE II, AGGREGATE SHALL CONFORM TO ASTM C33.

9. THE CONCRETE JOINTS IN SLABS AND WALLS, AS SHOWN, ARE MINIMUM REQUIREMENTS. CONTRACTOR MAY SUBMIT ALTERNATE CONSTRUCTION JOINT LAYOUT DRAWINGS, SUBJECT TO SPECIFIED REQUIREMENTS, TO THE ENGINEER FOR REVIEW AND APPROVAL PRIOR TO CONSTRUCTION.

10. THE CONTRACTOR SHALL PROVIDE THE ENGINEER AT LEAST 48 BUSINESS HOURS NOTICE PRIOR TO THE PLACEMENT OF CONCRETE TO ALLOW SUFFICIENT TIME FOR INSPECTIONS AND SCHEDULING OF TESTING SERVICES.

CONCRETE REINFORCING:

1. CLEARANCE FOR REINFORCEMENT BARS, UNLESS SHOWN OTHERWISE, SHALL BE: CAST AGAINST EARTH = 3", ALL OTHER CONCRETE SURFACES: #5 BAR OR SMALLER = 1 1/2", #6 BAR OR LARGER = 2".

2. ALL BENDS, UNLESS OTHERWISE SHOWN, SHALL BE 90 DEGREE ACI 318 STANDARD HOOKS.

3. ALL REINFORCING BENDS AND LAPS, UNLESS OTHERWISE NOTED, SHALL SATISFY THE FOLLOWING MINIMUM REQUIREMENTS:

CONCRETE DESIGN STRENGTH = 5,000 PSI		GRADE 60 REINFORCED STEEL						
BAR SIZE		#4	#5	#6	#7	#8	#9	#10
LAP SPLICE LENGTH								
SPACING <6"	TOP BAR *	2'-8"	3-'4"	4'-0"	5'-10"	6'-8"	8'-6"	10'-10"
	OTHER BAR	2'-1"	2'-7"	3'-1"	4'-6"	5'-2"	6'-7"	8'-4"
SPACING ≥6"	TOP BAR *	1'-8"	2'-0"	2'-5"	3'-6"	4'-0"	5'-0"	6'-2"
	OTHER BAR	1'-4"	1'-7"	1'-10"	2'-9"	3'-1"	3'-10"	4'-9"

* TOP BARS SHALL BE DEFINED AS ANY HORIZONTAL BARS PLACED SUCH THAT MORE THAN 12" OF CONCRETE IS CAST IN THE MEMBER BELOW THE BAR IN ANY SINGLE POUR. HORIZONTAL WALL BARS ARE CONSIDERED TOP BARS.

STRUCTURAL STEEL:

1. STRUCTURAL STEEL SHALL BE FABRICATED AND ERECTED IN ACCORDANCE WITH AISC SPECIFICATIONS AND CODE OF STANDARD PRACTICE.

2. STRUCTURAL STEEL SHALL CONFORM TO THE FOLLOWING ASTM DESIGNATION:
   - PLATES, ANGLES, AND CHANNELS: A36 MINIMUM F_y = 36 ksi

3. OPENINGS SHALL NOT BE PLACED IN STEEL MEMBERS UNLESS SPECIFICALLY DETAILED ON THE STRUCTURAL PLANS.

4. STRUCTURAL STEEL SHALL BE FREE OF EXCESSIVE RUST, MILL SCALE OR GREASE.

5. ALL WELDING SHALL BE PERFORMED BY AWS CERTIFIED WELDERS AND SHALL CONFORM TO THE REQUIREMENTS OF CBC SECTION 2204 AND THE AMERICAN WELDING SOCIETY (AWS), LATEST EDITION, AS FOLLOWS:
   - D1.1, STRUCTURAL WELDING CODE – STEEL
   - D1.8, STRUCTURAL WELDING CODE – SEISMIC SUPPLEMENT

6. WELDING ELECTRODES SHALL BE THE FOLLOWING TYPES: E70XX.

7. ALL FILLET WELDS SHALL BE AISC MINIMUM AND BUTT WELDS SHALL BE COMPLETE JOINT PENETRATION (CJP) UNLESS INDICATED OTHERWISE.

8. ALL BOLTS SHALL BE HIGH-STRENGTH ASTM A325X UNLESS NOTED OTHERWISE. ASTM F3125 HIGH-STRENGTH BOLTS SHALL BE USED FOR TWIST-OFF BOLTS. ALL HIGH-STRENGTH BOLTED CONNECTIONS SHALL BE ASSUMED TO BE SNUG-TIGHTENED JOINTS. SLIP CRITICAL CONNECTIONS SHALL BE NOTED AS A325X-SC, UNLESS NOTED OTHERWISE.

9. DISTANCE FROM EDGE OF PLATE TO CENTER OF BOLT SHALL BE 1 1/2" UNO.

10. INSTALLATION AND INSPECTION OF HIGH STRENGTH BOLTS SHALL CONFORM TO THE REQUIREMENTS OF THE LATEST AISC SPECIFICATION, SPECIFICATION FOR STRUCTURAL JOINTS USING HIGH-STRENGTH BOLTS (RCSC). CONTACT FACES OF STEEL AT CONNECTIONS WHERE HIGH STRENGTH SNUG-TIGHTENED BOLTS ARE USED MAY BE PAINTED. CONTACT FACES OF SLIP CRITICAL CONNECTIONS SHALL MEET THE REQUIREMENTS FOR CLASS B FAYING SURFACES. COATED FAYING SURFACES, WHEN SPECIFIED, SHALL BE QUALIFIED IN ACCORDANCE WITH CLASS A COATING.

11. THE STRUCTURAL STEEL FABRICATOR/CONTRACTOR SHALL FURNISH SHOP DRAWINGS OF ALL STRUCTURAL STEEL FOR ENGINEERS REVIEW AND APPROVAL PRIOR TO FABRICATION.

ALUMINUM:

1. ALUMINUM CONSTRUCTION SHALL CONFORM TO THE LATEST EDITION OF THE ALUMINUM CONSTRUCTION MANUAL OF THE ALUMINUM ASSOCIATION.

2. UNLESS OTHERWISE INDICATED, STRUCTURAL ALUMINUM MEMBERS SHALL BE ALLOY 6061-T6.

3. WHERE ALUMINUM IS IN CONTACT WITH CONCRETE OR MASONRY SURFACES, CONTACT SURFACES SHALL BE COATED WITH HEAVY ALKALI-RESISTANT BITUMINOUS PAINT.

4. GRATING AND CHECKERED PLATE SHALL BE ALUMINUM, UNLESS NOTED OTHERWISE. PROVIDE FULLY BANDED ALUMINUM GRATING WITH NON-SKID SURFACE OVER AREAS INDICATED ON THE DRAWINGS. MATERIAL SHALL BE 6061-T6 OR 6063-T6 PROVIDED WITH AN ANODIZED FINISH AND MEET THE STRENGTH AND DEFLECTION REQUIREMENTS.

5. THE ALUMINUM FABRICATOR/CONTRACTOR SHALL FURNISH SHOP DRAWINGS OF ALL ALUMINUM MEMBERS AND GRATING FOR ENGINEERS REVIEW AND APPROVAL PRIOR TO FABRICATION.

ALUMINUM GRATING AND PLATFORMS:

1. PROVIDE AL GRATING WITH NON-SKID, SERRATED SURFACE OVER AREAS INDICATED ON DRAWINGS. MATERIAL SHALL BE ALLOY 6061-T6 OR 6063-T6 CONFORMING TO ASTM B221 FOR BEARING BARS. CROSS BARS SHALL CONFORM TO ASTM B221 OT ASTM B210.

2. DESIGN CRITERIA:
   - UNIFORMLY DISTRIBUTED LOAD 100 psf
   - MAXIMUM GRATING DEFLECTION UNDER UNIFORMLY DISTRIBUTED LOAD OF 100 PSF, WITH A MAXIMUM DEFLECTION OF SPAN /360 OR ¼" WHICHEVER IS LESS

3. GRATING SHALL BE BANDED ON ALL EDGES.

4. UNLESS OTHERWISE NOTED ALL GRATING SHALL BE REMOVABLE.

5. PROVIDE AND INSTALL EMBEDDED EDGE ANGLES AND THEIR ANCHORAGE AT SUPPORTING CONCRETE WALLS. GRATING ATTACHMENT HARDWARE SHALL BE OF TYPE 316 STAINLESS STEEL, UNLESS OTHERWISE NOTED.

6. SUBMIT SHOP DRAWINGS FOR GRATING AND SUPPORTING FRAMING TO THE ENGINEER FOR REVIEW AND APPROVAL PRIOR TO FABRICATION.

VERIFY SCALE

BAR IS ONE INCH ON ORIGINAL DRAWING

0 1"

IF NOT ONE INCH ON THIS SHEET, ADJUST SCALES ACCORDINGLY

NO	DATE	REVISION	BY	APVD

FOR REFERENCE ONLY
PROJECT MANAGER RFP
(NOT FOR CONSTRUCTION)

REGISTERED PROFESSIONAL ENGINEER JOSEPH A. RIESS No. C66413 CIVIL STATE OF CALIFORNIA 3/25/2024

DESIGN H. MEHERE
DRAWN J. MARTIN
CHECKED J. RIESS
APPROVED M. PUHLMANN

WATERWORKS ENGINEERS
760 CYPRESS AVE SUITE 201, REDDING, CA. 96001

PARADISE IRRIGATION DISTRICT

WASHWATER EQUALIZER TANK REPLACEMENT PROJECT

PARADISE, CA

STRUCTURAL

STRUCTURAL ABBREVIATIONS AND NOTES

DATE MARCH 2024
PROJECT NO. 22-098
DRAWING NO. S-1
SHEET NO. 14

FILENAME: L:\CAD\Projects\22-098 PID WTP Equalizer Tank Replacement\07 Drawings\2298D-S001.dgn PLOT DATE: 3/25/2024 PLOT TIME: 3:08:06 AM

ADHESIVE ANCHORS:

1. THE ADHESIVE ANCHOR SYSTEM USED FOR POST-INSTALLED ANCHORAGE TO CONCRETE SHALL CONFORM TO THE REQUIREMENTS OF THE MOST RECENTLY PUBLISHED ACI 355.4, ACCEPTANCE CRITERIA FOR QUALIFICATION OF POST-INSTALLED ADHESIVE ANCHORS IN CONCRETE AND COMMENTARY. THE ANCHOR SYSTEM SHALL BE ONE OF THE FOLLOWING:
   - HILTI HIT-HY 200.
   - SIMPSON SET-3G.
2. ADHESIVE ANCHORS SHALL BE SUPPLIED AS AN ENTIRE SYSTEM INCLUDING, BUT NOT LIMITED TO, THE NEW ADHESIVE CARTRIDGE, A CLEAN MIXING NOZZLE, EXTENSION TUBE, A DISPENSING GUN, AND ALL MANUFACTURER RECOMMENDED SUPPLIES FOR PROPERLY CLEANING THE DRILLED HOLE.
3. ALL-THREAD ROD TO BE USED IN ADHESIVE ANCHOR ASSEMBLIES SHALL CONFORM TO ASTM A36, A193 (GR B7), A307, OR F1554. STAINLESS STEEL ANCHOR RODS SHALL BE TYPE 316. NUTS, WASHERS, AND OTHER HARDWARE USED WITH AN ALL-THREAD SHALL HAVE A MATERIAL OR ALLOY DESIGNATION THAT MATCHES THE ALL-THREAD MATERIAL / ALLOY.
4. CONCRETE SHALL HAVE A MINIMUM COMPRESSIVE STRENGTH OF 2,500 PSI AT THE TIME OF ADHESIVE ANCHOR INSTALLATION. CONCRETE SHALL HAVE A MINIMUM AGE OF 21 DAYS AT THE TIME OF ADHESIVE ANCHOR INSTALLATION.
5. CONCRETE TEMPERATURE AT THE TIME OF ADHESIVE ANCHOR INSTALLATION SHALL BE WITHIN THE ALLOWABLE TEMPERATURE RANGE SPECIFIED IN THE MANUFACTURER'S PRINTED INSTALLATION INSTRUCTIONS AND ICC REPORT.
6. EMBEDMENT DEPTH AND ANCHOR PROJECTION FROM THE CONCRETE SURFACE SHALL BE AS SHOWN ON THE DRAWINGS FOR THE PARTICULAR ANCHOR OR GROUP OF ANCHORS BEING INSTALLED. ABSENT ANY INFORMATION, THE MINIMUM EMBEDMENT DEPTH SHALL BE 12d WHERE "d" IS THE ANCHOR DIAMETER.
7. ADHESIVE ANCHORS SHALL BE INSTALLED BY QUALIFIED PERSONNEL TRAINED TO INSTALL ADHESIVE ANCHORS IN ACCORDANCE WITH THE SPECIFICATIONS. POST-INSTALLED ADHESIVE ANCHORS SHALL BE INSTALLED IN ACCORDANCE WITH THE MANUFACTURER'S PRINTED INSTALLATION INSTRUCTIONS.
8. THE INSTALLER'S QUALIFICATIONS SHALL BE SUBMITTED AND APPROVED IN ACCORDANCE WITH SECTION 05 05 06 OF THE SPECIFICATIONS.
9. WHEN DRILLING HOLES IN EXISTING CONCRETE, USE CARE AND CAUTION TO AVOID CUTTING OR DAMAGING THE EXISTING REINFORCING BARS. MAINTAIN A REASONABLE CLEARANCE BETWEEN REINFORCEMENT AND THE DRILLED-IN ANCHOR.
10. SPECIAL INSPECTION IS REQUIRED PER CBC SECTION 1705 AND THE REQUIREMENTS OF THE ICC REPORT. THE SPECIAL INSPECTOR MUST BE PERIODICALLY ON THE JOBSITE DURING ANCHOR INSTALLATION TO VERIFY ANCHOR TYPE, ANCHOR DIMENSIONS, HOLE CLEANLINESS, EMBEDMENT DEPTH, CONCRETE TYPE, DRILL BIT DIAMETER, HOLE DEPTH, EDGE DISTANCE, ANCHOR SPACING, AND CONCRETE THICKNESS.

EXPANSION ANCHORS:

1. EXPANSION ANCHORS SHALL BE STAINLESS STEEL HILTI KWIK BOLT TZ OR SIMPSON STRONG-BOLT 2, UNLESS NOTED OTHERWISE. INSTALL ANCHORS IN CONFORMANCE WITH THE MANUFACTURER'S REQUIREMENTS AND ICC REPORT.
2. SPECIAL INSPECTION IS REQUIRED PER IBC SECTION 1705 AND THE REQUIREMENTS OF THE ICC REPORT.
3. CONTRACTOR SHALL VERIFY MINIMUM EDGE DISTANCES, SPACING AND THICKNESSES ARE IN ACCORDANCE WITH THE MANUFACTURER'S REQUIREMENTS PRIOR TO INSTALLING ANCHORS.
4. WHEN DRILLING HOLES IN EXISTING CONCRETE, USE CARE AND CAUTION TO AVOID CUTTING OR DAMAGING THE EXISTING REINFORCING BARS. MAINTAIN A REASONABLE CLEARANCE BETWEEN REINFORCEMENT AND THE DRILLED-IN ANCHOR.
5. THE SPECIAL INSPECTOR MUST BE PRESENT ON THE JOB SITE DURING ANCHOR INSTALLATION TO VERIFY ANCHOR TYPE, ANCHOR DIMENSIONS, HOLE CLEANLINESS, EMBEDMENT DEPTH, CONCRETE TYPE, DRILL BIT DIAMETER, HOLE DEPTH, EDGE DISTANCE, ANCHOR SPACING, AND CONCRETE THICKNESS.

DEFERRED SUBMITTALS:

1. PER 2021 IBC 107.3.4.1 THE FOLLOWING ITEMS, DRAWINGS AND CALCULATIONS, SHALL BE STAMPED BY AN ENGINEER REGISTERED IN THE STATE OF THE PROJECT. ITEMS SHALL BE SUBMITTED TO THE REGISTERED DESIGN PROFESSIONAL IN RESPONSIBLE CHARGE FOR REVIEW AND APPROVAL. FOLLOWING APPROVAL BY THE REGISTERED DESIGN PROFESSIONAL IN RESPONSIBLE CHARGE, THE CONTRACTOR SHALL SUBMIT THE ITEMS TO THE BUILDING OFFICIAL WITH A NOTATION INDICATING THAT THE DEFERRED SUBMITTAL DOCUMENTS HAVE BEEN REVIEWED AND FOUND TO BE IN GENERAL CONFORMANCE TO THE DESIGN OF THE STRUCTURE. THE CONTRACTOR SHALL NOT START FABRICATION OR ERECTION PRIOR TO REVIEW AND APPROVAL BY THE BUILDING OFFICIAL. THE CONTRACTOR SHALL INCLUDE IN HIS BID ALL TIME AND EFFORT REQUIRED TO OBTAIN A BUILDING OFFICIAL REVIEW/PERMIT FOR THE FOLLOWING PREFABRICATED STRUCTURAL COMPONENTS:
   - PRECAST CONCRETE ELEMENTS
   - HANDRAIL AND GUARDRAIL
   - PIPE SUPPORT SYSTEM
   - ANCHORAGE OF EQUIPMENT OVER 400 POUNDS

STRUCTURAL OBSERVATION:

1. STRUCTURAL OBSERVATION SHALL BE IN ACCORDANCE WITH THE 2022 CBC SECTION 1704.6 WITH LOCAL AMENDMENTS.
2. THE OWNER SHALL EMPLOY A REGISTERED DESIGN PROFESSIONAL TO PERFORM STRUCTURAL OBSERVATIONS FOR GENERAL CONFORMANCE TO THE APPROVED CONSTRUCTION DOCUMENTS. STRUCTURAL OBSERVATION DOES NOT WAIVE THE RESPONSIBILITY FOR ANY REQUIRED SPECIAL INSPECTIONS OR INSPECTIONS BY THE BUILDING OFFICIAL.
3. ONSITE STRUCTURAL OBSERVATION SHALL BE PERFORMED AT LEAST ONCE A MONTH, PLUS AT COMPLETION, FOR EACH SEISMIC FORCE OR WIND FORCE RESISTING SYSTEM IDENTIFIED, INCLUDING FOUNDATIONS AND CONNECTIONS.
4. AT THE CONCLUSION OF CONSTRUCTION, THE STRUCTURAL OBSERVER SHALL SUBMIT TO THE BUILDING OFFICIAL A WRITTEN STATEMENT THAT THE SITE VISITS HAVE BEEN MADE AND IDENTIFY ANY REPORTED DEFICIENCIES WHICH, TO THE BEST OF THE STRUCTURAL OBSERVER'S KNOWLEDGE, HAVE NOT BEEN RESOLVED.
5. STRUCTURAL OBSERVATION SHALL INCLUDE VISUAL OBSERVATION OF THE STRUCTURAL SYSTEM AT SIGNIFICANT CONSTRUCTION STAGES AND AT COMPLETION OF THE STRUCTURAL SYSTEM FOR EACH STRUCTURE CONTAINED IN THE WORK. THE CONTRACTOR SHALL SCHEDULE AND FACILITATE STRUCTURAL OBSERVATION INCLUDING THE FOLLOWING:
   - FOUNDATION REINFORCING STEEL, WATERSTOPS, EMBEDS, AND SIMILAR ITEMS PRIOR TO CONCRETE PLACEMENT.
   - WALL TO FOUNDATION CONNECTIONS PRIOR TO FORM CLOSURE FOR ALL MATERIALS.
   - CONCRETE SHEAR WALLS PRIOR TO CONCRETE PLACEMENT.
   - SYSTEM CONNECTION EMBEDS PRIOR TO GROUT OR CONCRETE PLACEMENTS.
   - CONCRETE WALL TO FLOOR CONNECTIONS PRIOR TO FORM CLOSURE OR OTHER COVER.
   - ALL OTHER WALL ANCHORAGE CONNECTIONS FOR MATERIALS NOT SPECIFICALLY IDENTIFIED ABOVE.

STATEMENT OF SPECIAL INSPECTIONS:

1. SPECIAL INSPECTION IS IN ADDITION TO THE INSPECTIONS REQUIRED BY SECTION 110 OF THE CBC. THE OWNER WILL EMPLOY A SPECIAL INSPECTOR DURING CONSTRUCTION ON THE TYPES OF WORK INDICATED BELOW. THE CONTRACTOR SHALL COORDINATE WITH THE SPECIAL INSPECTOR TO SCHEDULE INSPECTION OF THE TYPES OF WORK INDICATED BELOW.
2. SPECIAL INSPECTIONS WILL BE PERFORMED BY AN INDEPENDENT QUALIFIED PERSON WHO IS ACCEPTABLE TO THE ENGINEER AND AUTHORITY HAVING JURISDICTION. THE INSPECTORS FOR EACH SYSTEM AND MATERIAL WILL BE ICC CERTIFIED OR OTHERWISE APPROVED BY THE BUILDING OFFICIAL. THE SPECIAL INSPECTOR WILL OBSERVE THE INDICATED WORK FOR COMPLIANCE WITH THE APPROVED CONTRACT DOCUMENTS AND SUBMIT RECORDS OF INSPECTION.
3. INSPECTION RECORDS AND TESTING REPORTS SHALL BE SUBMITTED TO THE ENGINEER, OWNER, AND AUTHORITY HAVING JURISDICTION WITHIN ONE WEEK OF INSPECTION OR WITHIN ONE WEEK OF TEST COMPLETION.
4. AT THE CONCLUSION OF CONSTRUCTION, A FINAL REPORT DOCUMENTING REQUIRED SPECIAL INSPECTIONS AND CORRECTION OF DISCREPANCIES SHALL BE SUBMITTED.
5. PERIODIC SPECIAL INSPECTION IS DEFINED AS SPECIAL INSPECTION BY THE SPECIAL INSPECTOR WHO IS INTERMITTENTLY PRESENT WHERE THE WORK TO BE INSPECTED HAS BEEN OR IS BEING PERFORMED.
6. SPECIAL INSPECTION IS REQUIRED PER CHAPTER 17 OF THE CBC FOR THE FOLLOWING ITEMS:
   - SOILS (BY CONTRACTOR PER SPECIFICATION SECTION 31 05 03)
   - CONCRETE CONSTRUCTION
   - MASONRY CONSTRUCTION
   - ANCHORAGE OF MECHANICAL AND ELECTRICAL COMPONENTS

REQUIRED VERIFICATION AND SPECIAL INSPECTION OF SOILS

	VERIFICATION AND INSPECTION	CONTINUOUS	PERIODIC	REFERENCED STANDARD	2019 CBC REFERENCE
1.	VERIFY MATERIALS BELOW SHALLOW FOUNDATIONS ARE ADEQUATE TO ACHIEVE THE DESIGN BEARING CAPACITY	-	X	SECTION 31 05 03 - EARTHWORK	1705.6, 1804
2.	VERIFY EXCAVATIONS ARE EXTENDED TO PROPER DEPTH AND HAVE REACHED PROPER MATERIAL	-	X	SECTION 31 05 03 - EARTHWORK	1705.6
3.	PERFORM CLASSIFICATION AND TESTING OF COMPACTED FILL MATERIALS	-	X	SECTION 31 05 03 - EARTHWORK	1705.6
4.	VERIFY USE OF PROPER MATERIALS, DENSITIES AND LIFT THICKNESSES DURING PLACEMENT AND COMPACTION OF COMPACTED FILL	X	-	SECTION 31 05 03 - EARTHWORK	1705.6
5.	PRIOR TO PLACEMENT OF COMPACTED FILL, INSPECT SUBGRADE AND VERIFY THAT SITE HAS BEEN PREPARED PROPERLY	-	X	SECTION 31 05 03 - EARTHWORK	1705.6

REQUIRED SPECIAL INSPECTION OF CONCRETE CONSTRUCTION

	VERIFICATION AND INSPECTION	CONTINUOUS	PERIODIC	REFERENCED STANDARD	2019 CBC REFERENCE
1.	INSPECT REINFORCEMENT, AND VERIFY PLACEMENT	-	X	ACI 318: Ch. 20, 25.2, 25.3, 26.6.1-26.6.3	1908.4
2.	INSPECTION OF ANCHORS CAST IN CONCRETE	-	X	ACI 318: 17.8.2	-
3.	INSPECTION OF MECHANICAL ANCHORS AND ADHESIVE ANCHORS	-	X	ACI 318: 17.8.2	-
4.	VERIFYING USE OF REQUIRED DESIGN MIX	-	X	ACI 318: Ch. 19, 26.4.3, 26.4.4	1904.1, 1904.2, 1908.2, 1908.3
5.	PRIOR TO CONCRETE PLACEMENT, FABRICATE SPECIMENS FOR STRENGTH TESTS, PERFORM SLUMP AND AIR CONTENT TESTS, AND DETERMINE THE TEMPERATURE OF THE CONCRETE.	X	-	ASTM: C172, C31 ACI318: 26.5, 26.12	1908.10
6.	INSPECT CONCRETE PLACEMENT FOR PROPER APPLICATION TECHNIQUES	X	-	ACI 318: 26.5	1908.6, 1908.7, 1908.8
7.	VERIFY MAINTENANCE OF SPECIFIED CURING TEMPERATURE AND TECHNIQUES	-	X	ACI 318: 26.5.3-26.5.5	1908.9
8.	INSPECTION FORMWORK FOR SHAPE, LOCATION AND DIMENSIONS OF THE CONCRETE MEMBER BEING FORMED	-	X	ACI 318: 26.11.1.2(b)	-

(a) R = REQUIRED, NR = NOT REQUIRED
(b) LEVEL 2 IS REQUIRED FOR RISK CATEGORY II & III. LEVEL 3 IS REQUIRED FOR RISK CATEGORY IV.

REQUIRED SPECIAL INSPECTION OF STEEL CONSTRUCTION (ANSI/AISC 360-16)

QUALITY CONTROL (QC) INSPECTION TASKS SHALL BE PERFORMED BY THE FABRICATOR'S OR ERECTOR'S QUALITY CONTROL INSPECTOR (QCI). QUALITY ASSURANCE (QA) INSPECTION OF FABRICATED ITEMS SHALL BE MADE AT THE FABRICATOR'S PLANT. QA INSPECTION OF ERECTED STEEL SYSTEMS SHALL BE MADE AT THE PROJECT SITE. THE QUALITY ASSURANCE INSPECTOR (QAI) SHALL REVIEW THE MATERIAL TEST REPORTS AND CERTIFICATIONS FOR COMPLIANCE WITH THE CONSTRUCTION DOCUMENTS.
O = OBSERVE THESE ITEMS ON A RANDOM BASIS.
P = PERFORM THESE TASKS FOR EACH WELDED JOINT OR MEMBER.

	INSPECTION TASKS PRIOR TO WELDING	QC	QA
1.	WELDER QUALIFICATION RECORDS AND CONTINUITY RECORDS	P	0
2.	WELDING PROCEDURE SPECIFICATIONS AVAILABLE	P	P
3.	MANUFACTURER CERTIFICATIONS FOR WELDING CONSUMABLES AVAILABLE	P	P
4.	MATERIAL IDENTIFICATION (TYPE/GRADE)	O	O
5.	WELDER IDENTIFICATION SYSTEM	O	O
6.	FIT-UP OF GROOVE WELDS		
	JOINT PREPARATION		
	DIMENSIONS	O	O
	CLEANLINESS		
	TACKING		
	BACKING TYPE		
7.	CONFIGURATION AND FINISH OF ACCESS HOLES	O	O
8.	FIT-UP OF FILLET WELDS		
	DIMENSIONS	O	O
	CLEANLINESS		
	TACKING		
9.	CHECK WELDING EQUIPMENT	O	-
	INSPECTION TASKS DURING WELDING	QC	QA
1.	CONTROL AND HANDLING OF WELDING CONSUMABLES (PACKING AND EXPOSURE CONTROL)	O	O
2.	NO WELDING OVER CRACKED TACK WELDS	O	O
3.	ENVIRONMENTAL CONDITIONS (WIND SPEED, PRECIPITATION, AND TEMPERATURE)	O	O
4.	WPS FOLLOWED		
	SETTINGS ON WELDING EQUIPMENT		
	TRAVEL SPEED		
	SELECTED WELDING MATERIALS	O	O
	SHIELDING GAS TYPE/FLOW RATE		
	PREHEAT APPLIED		
	INTERPASS TEMPERATURE MAINTAINED		
	PROPER POSITION (F, V, H, OH)		
5.	WELDING TECHNIQUES		
	INTERPASS AND FINAL CLEANING	O	O
	EACH PASS WITHIN PROFILE LIMITATIONS		
	EACH PASS MEETS QUALITY REQUIREMENTS		
	INSPECTION TASKS AFTER WELDING	QC	QA
1.	WELDS CLEANED	O	O
2.	SIZE, LENGTH AND LOCATION OF WELDS	P	P
3.	WELDS MEET VISUAL ACCEPTANCE CRITERIA		
	CRACK PROHIBITION		
	WELD/BASE METAL FUSION		
	CRATER CROSS SECTION	P	P
	WELD PROFILES		
	WELD SIZE		
	UNDERCUT		
	POROSITY		
4.	ARC STRIKES	P	P
5.	k-AREA	P	P
6.	BACKING AND WELD TABS REMOVED	P	P
7.	REPAIR ACTIVITIES	P	P
8.	DOCUMENT ACCEPTANCE OR REJECTION OF WELDED JOINT OR MEMBER	P	P
	INSPECTION TASKS PRIOR TO BOLTING	QC	QA
1.	MANUFACTURER'S CERTIFICATIONS AVAILABLE FOR FASTENER MATERIALS	O	P
2.	FASTENERS MARKED IN ACCORDANCE WITH ASTM REQUIREMENTS	O	O
3.	CORRECT FASTENERS SELECTED FOR THE JOINT DETAIL (GRADE, TYPE, BOLT LENGTH IF THREADS ARE TO BE EXCLUDED FROM SHEAR PLANE)	O	O
4.	CORRECT BOLTING PROCEDURE SELECTED FOR JOINT DETAIL	O	O
5.	CONNECTING ELEMENTS, INCLUDING THE APPROPRIATE FAYING SURFACE CONDITION AND HOLE PREPARATION, IF SPECIFIED, MEET APPLICABLE REQUIREMENTS	O	O
6.	PRE-INSTALLATION VERIFICATION TESTING BY INSTALLATION PERSONNEL OBSERVED AND DOCUMENTED FOR FASTENER ASSEMBLIES AND METHODS USED	P	O
7.	PROPER STORAGE PROVIDED FOR BOLTS, NUTS, WASHERS AND OTHER FASTENER COMPONENTS	O	O
	INSPECTION TASKS DURING BOLTING	QC	QA
1.	FASTENER ASSEMBLIES PLACED IN ALL HOLES AND WASHERS AND NUTS ARE POSITIONED AS REQUIRED	O	O
2.	JOINT BROUGHT TO THE SNUG-TIGHT CONDITION PRIOR TO THE PRETENSIONING OPERATION	O	O
3.	FASTENER COMPONENT NOT TURNED BY THE WRENCH PREVENTED FROM ROTATING	O	O
4.	FASTENERS ARE PRETENSIONED IN ACCORDANCE WITH THE RCSC SPECIFICATION, PROGRESSING SYSTEMATICALLY FROM THE MOST RIGID POINT TOWARD THE FREE EDGES	O	O
	INSPECTION TASKS AFTER BOLTING	QC	QA
1.	DOCUMENT ACCEPTANCE OR REJECTION OF BOLTED CONNECTIONS	P	P

(a) P = PERIODIC, C = CONTINUOUS
(b) LEVEL 2 IS REQUIRED FOR RISK CATEGORY II & III. LEVEL 3 IS REQUIRED FOR RISK CATEGORY IV.

VERIFY SCALE
BAR IS ONE INCH ON ORIGINAL DRAWING
0 1"
IF NOT ONE INCH ON THIS SHEET, ADJUST SCALES ACCORDINGLY

NO	DATE	REVISION	BY	APVD

FOR REFERENCE ONLY
PROJECT MANAGER RFP
(NOT FOR CONSTRUCTION)

REGISTERED PROFESSIONAL ENGINEER JOSEPH A. RIESS No. C66413 CIVIL STATE OF CALIFORNIA 3/25/2024

DESIGN H. MEHERE
DRAWN J. MARTIN
CHECKED J. RIESS
APPROVED M. PUHLMANN

WATERWORKS ENGINEERS
760 CYPRESS AVE SUITE 201, REDDING, CA. 96001

PARADISE IRRIGATION DISTRICT
WASHWATER EQUALIZER TANK REPLACEMENT PROJECT
PARADISE, CA

STRUCTURAL
STRUCTURAL NOTES CONTINUED

DATE MARCH 2024
PROJECT NO. 22-098
DRAWING NO. S-2
SHEET NO. 15

FILENAME: L:\CAD\Projects\22-098 PID WTP Equalizer Tank Replacement\07 Drawings\2298D-S002.dgn
PLOT DATE: 3/25/2024 PLOT TIME: 3:32:19 PM

GENERAL NOTES

1. TYPICAL AL BEAM WALL CONNECTION, STD DTL 05 05 09.33.
2. TYPICAL AL FRAMING CONNECTION, STD DTL 05 05 09.43.

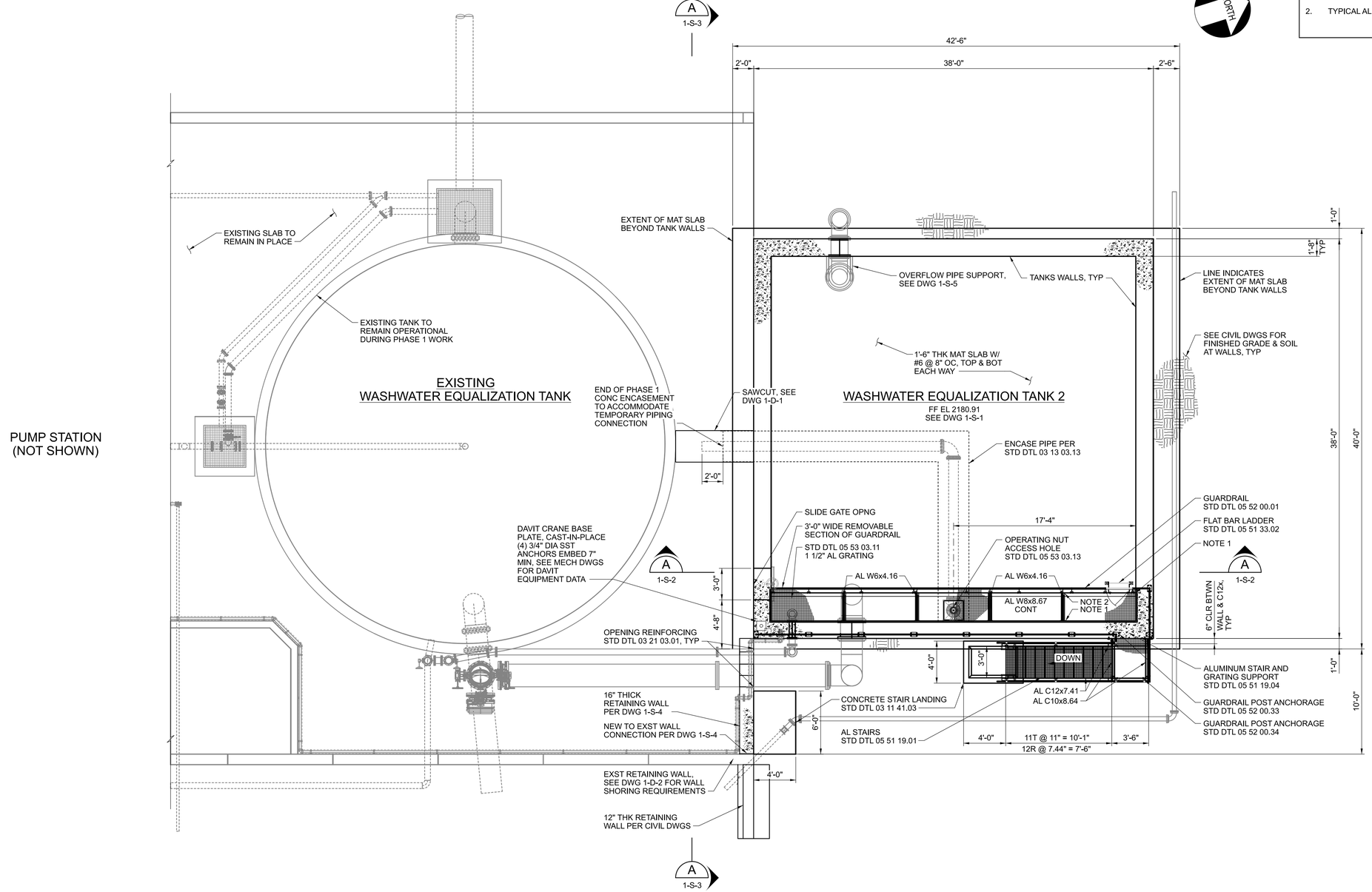

PLAN

3/16"=1'-0"

4 0 4 8 FEET
SCALE 3/16"=1'-0"

VERIFY SCALE
BAR IS ONE INCH ON ORIGINAL DRAWING
0 1"
IF NOT ONE INCH ON THIS SHEET, ADJUST SCALES ACCORDINGLY

NO	DATE	REVISION	BY	APVD

FOR REFERENCE ONLY
PROJECT MANAGER RFP
(NOT FOR CONSTRUCTION)

REGISTERED PROFESSIONAL ENGINEER JOSEPH A. RIESS No. C66413 CIVIL STATE OF CALIFORNIA 3/25/2024

DESIGN: H. MEHERE
DRAWN: J. MARTIN
CHECKED: J. RIESS
APPROVED: M. PUHLMANN

WATERWORKS ENGINEERS
760 CYPRESS AVE SUITE 201, REDDING, CA. 96001

PARADISE IRRIGATION DISTRICT
WASHWATER EQUALIZER TANK REPLACEMENT PROJECT
PARADISE, CA

STRUCTURAL
PHASE 1
TANK 2 PLAN

DATE: MARCH 2024
PROJECT NO. 22-098
DRAWING NO. 1-S-1
SHEET NO. 16

FILENAME: L:\CAD\Projects\22-098 PID WTP Equalizer Tank Replacement\07 Drawings\2298D-10S101.dgn
PLOT DATE: 3/25/2024 PLOT TIME: 5:53:35 AM

GENERAL NOTES

1. PROVIDE ADDITIONAL REINFORCEMENT AT 6'-0" SQ AREA AT WALL CORNERS. PROVIDE #6 HORIZ BARS @ 8" OC, SPACING AT CORNER INTERSECTIONS TO BE 4" OC, TYP.
2. PROVIDE 3/4" CHAMFER AT ALL TANK WALL EDGES.

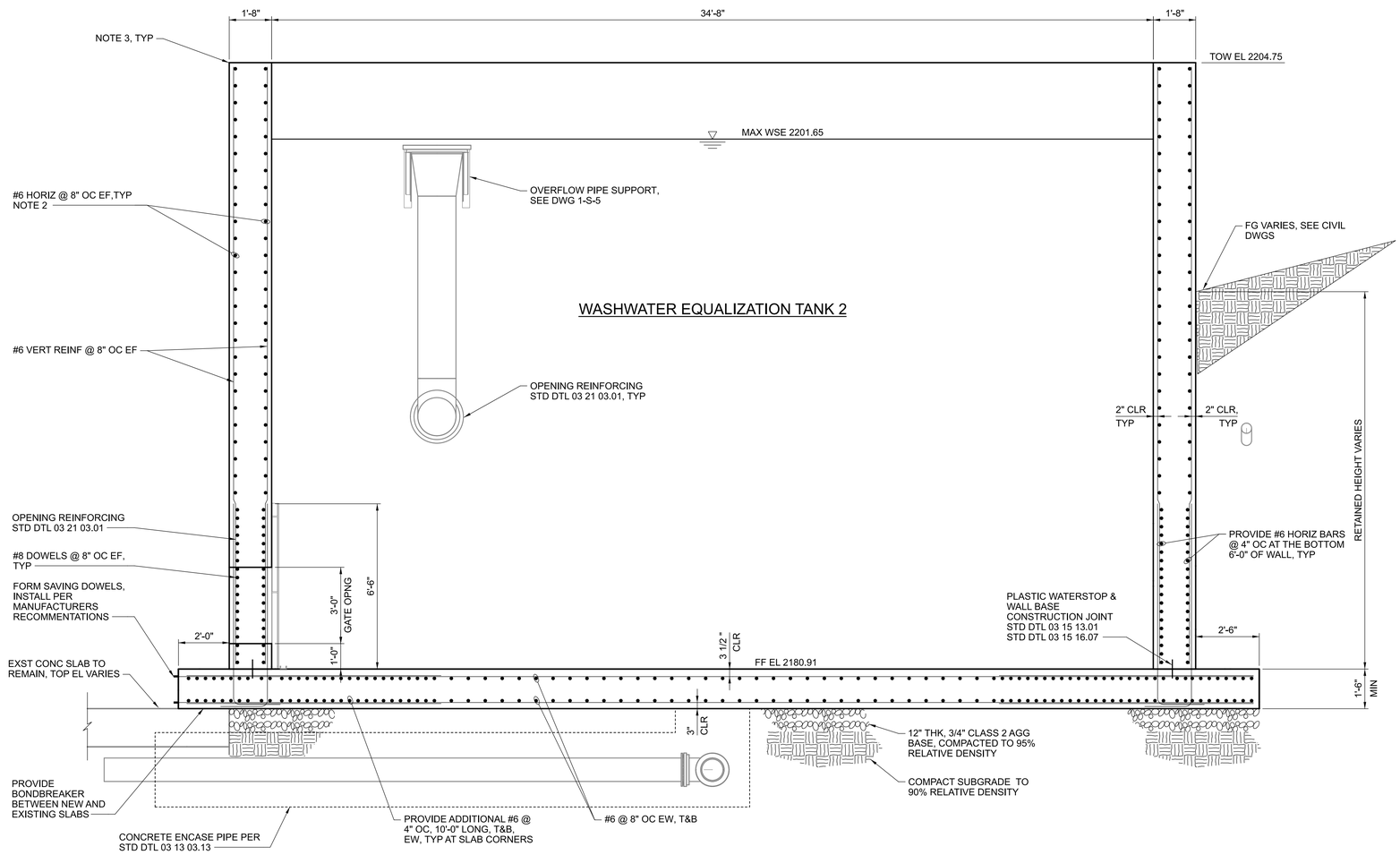

A 1-S-2 SECTION 3/8"=1'-0"

2 0 2 4 FEET
SCALE 3/8"=1'-0"

VERIFY SCALE
BAR IS ONE INCH ON ORIGINAL DRAWING
0 1"
IF NOT ONE INCH ON THIS SHEET, ADJUST SCALES ACCORDINGLY

NO	DATE	REVISION	BY	APVD

FOR REFERENCE ONLY
PROJECT MANAGER RFP
(NOT FOR CONSTRUCTION)

REGISTERED PROFESSIONAL ENGINEER JOSEPH A. RIESS No. C66413 CIVIL STATE OF CALIFORNIA 3/25/2024

DESIGN H. MEHERE
DRAWN J. MARTIN
CHECKED J. RIESS
APPROVED M. PUHLMANN

WATERWORKS ENGINEERS
760 CYPRESS AVE SUITE 201, REDDING, CA. 96001

PARADISE IRRIGATION DISTRICT
WASHWATER EQUALIZER TANK REPLACEMENT PROJECT
PARADISE, CA

STRUCTURAL
PHASE 1
TANK 2 SECTION

DATE MARCH 2024
PROJECT NO. 22-098
DRAWING NO. 1-S-2
SHEET NO. 17

FILENAME: L:\CAD\Projects\22-098 PID WTP Equalizer Tank Replacement\07 Drawings\2298D-10S201.dgn
PLOT DATE: 3/25/2024 PLOT TIME: 3:25:54 AM

GENERAL NOTES

1. SEE DWGS 1-S-1 AND 1-S-2 FOR DETAILS NOT SHOWN ON THIS DWG.

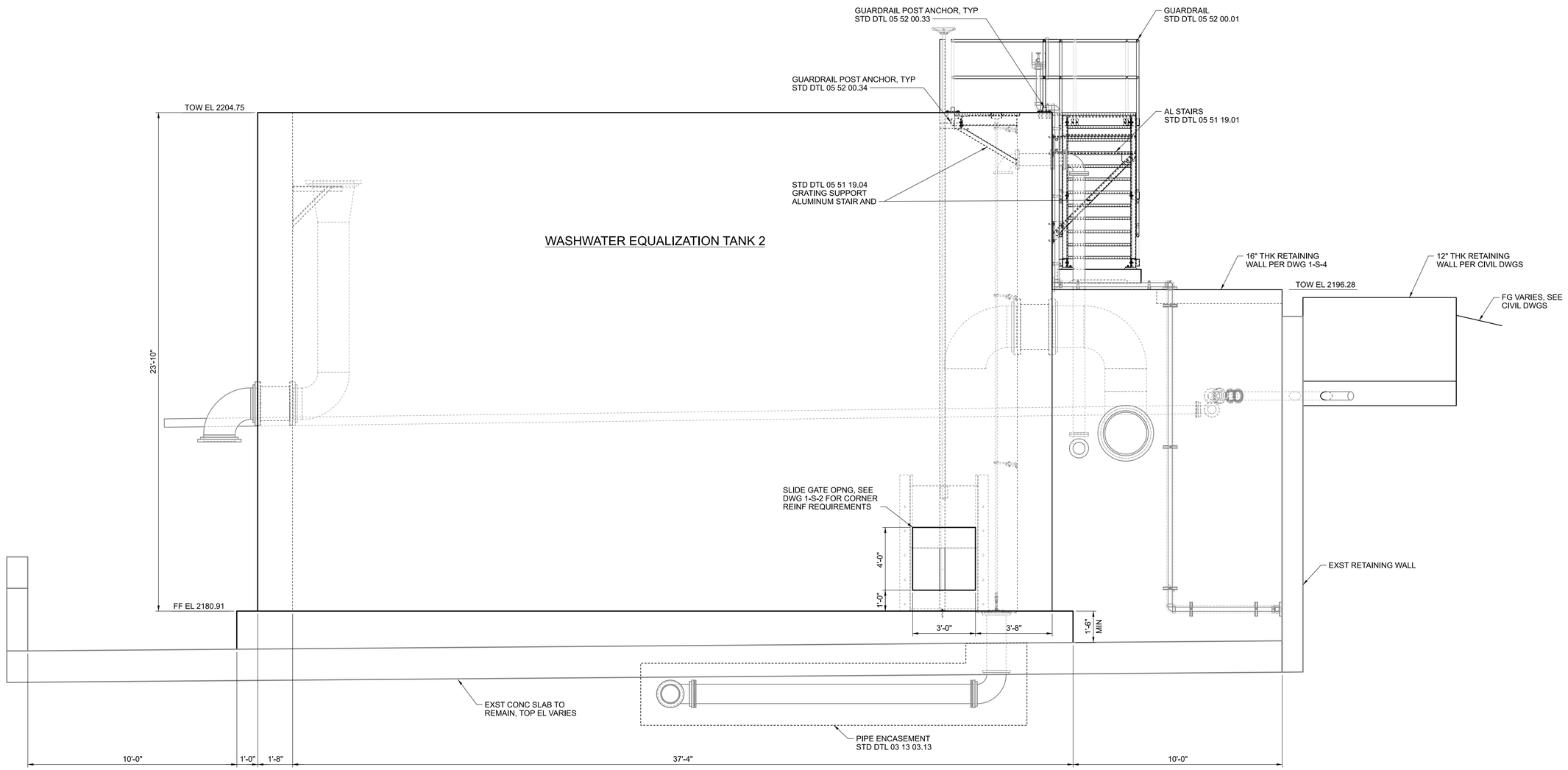

A 1-S-1 SECTION 3/8"=1'-0"

VERIFY SCALE				
BAR IS ONE INCH ON ORIGINAL DRAWING 0 1" IF NOT ONE INCH ON THIS SHEET, ADJUST SCALES ACCORDINGLY	NO	DATE	REVISION	BY	APVD

FOR REFERENCE ONLY
PROJECT MANAGER RFP
(NOT FOR CONSTRUCTION)

REGISTERED PROFESSIONAL ENGINEER
JOSEPH A. RIESS
No. C66413
CIVIL
STATE OF CALIFORNIA
3/25/2024

DESIGN H. MEHERE
DRAWN J. RIESS
CHECKED J. RIESS
APPROVED M. PUHLMANN

WATERWORKS ENGINEERS
760 CYPRESS AVE SUITE 201, REDDING, CA. 96001

PARADISE IRRIGATION DISTRICT

WASHWATER EQUALIZER TANK REPLACEMENT PROJECT

PARADISE, CA

STRUCTURAL

PHASE 1
TANK 2 SECTION

DATE MARCH 2024
PROJECT NO. 22-098
DRAWING NO. 1-S-3
SHEET NO. 18

FILENAME: L:\CAD\Projects\22-098 PID WTP Equalizer Tank Replacement\07 Drawings\2298D-10S202.dgn
PLOT DATE: 3/25/2024 PLOT TIME: 3:12:23 AM

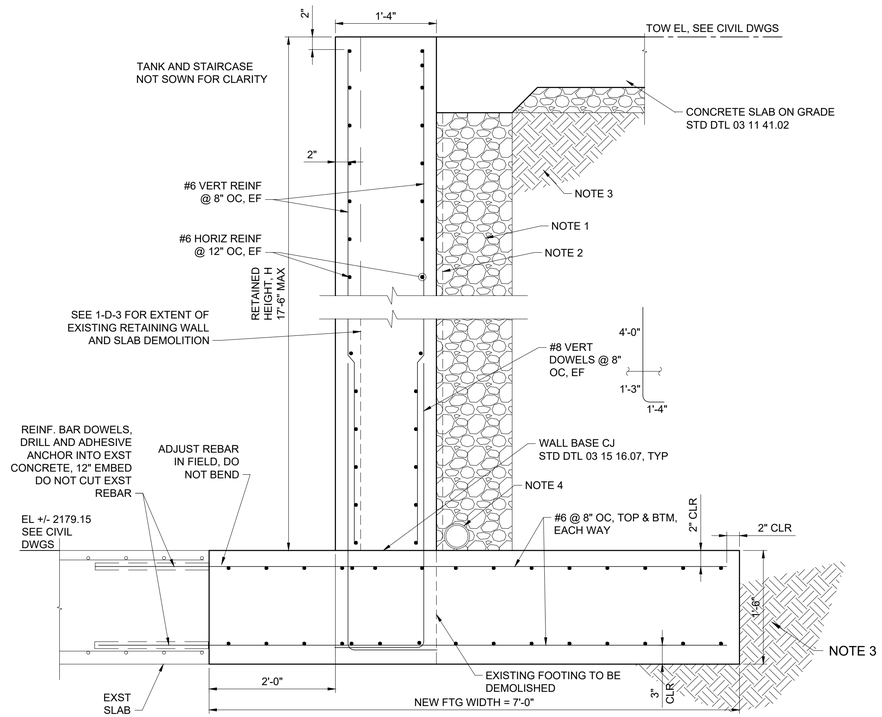

16" THICK RETAINING WALL

1 RETAINING WALLS
1-S-1 1" = 1'-0"

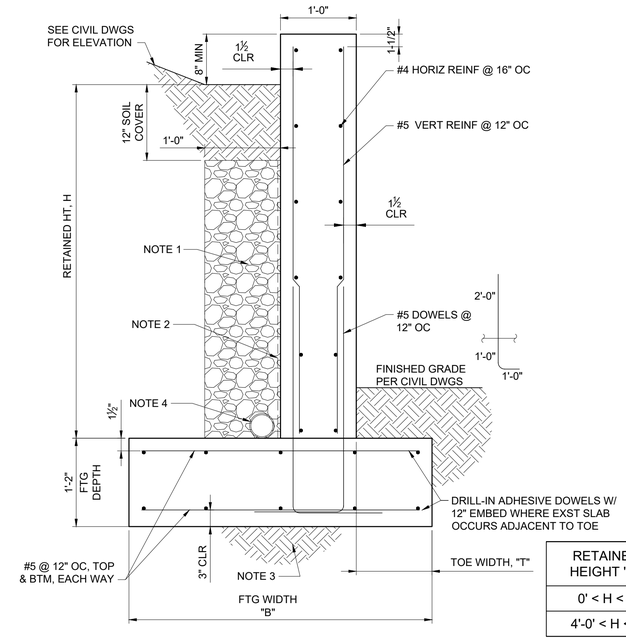

12" THICK SITE RETAINING WALL

RETAINING WALL NOTES

1. 3/4" CRUSHED ROCK WRAPPED IN GEOTEXTILE FABRIC, MIRAFI 140N OR EQUAL.
2. MIRADRAIN 600XL OR EQUAL, INSTALL PER MF RECOMMENDATIONS, ATTACH FABRIC SIDE AWAY FROM WALL
3. SCARIFY AND COMPACT MINIMUM 12" OF SUBGRADE TO 90% RELATIVE COMPACTION DENSITY
4. 4" DIA CONT PERFORATED PVC5, ROUTE PIPE TO TERMINATION THROUGH WALL.

RETAINED HEIGHT "H"	TOE WIDTH "T"	FOOTING WIDTH "B"
0' < H < 4'-0"	6"	3'-0"
4'-0' < H < 8'-0"	1'-6"	5'-0"

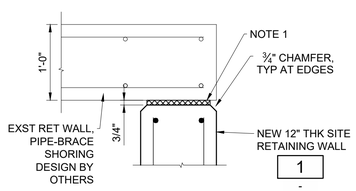

PLAN AT NORTH SIDE

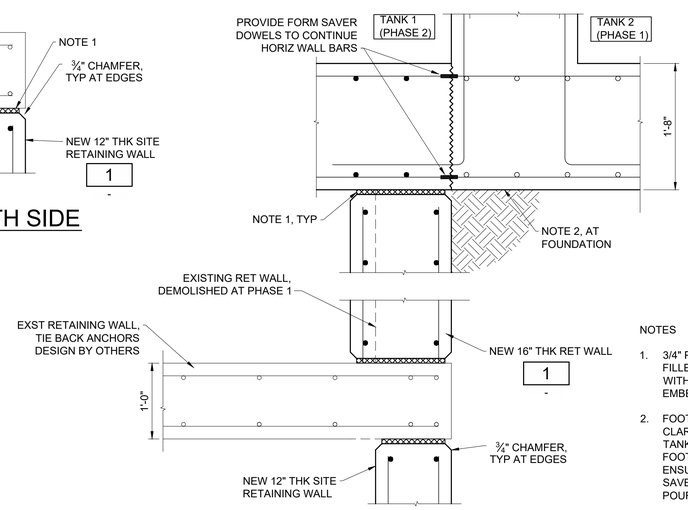

PLAN AT SOUTH SIDE

NOTES

1. 3/4" PREMOLDED EXPANSION JOINT FILLER (BITUMINOUS TYPE) FASTEN WITH 8d COMMON NAILS @ 1'-0" OC EMBEDDED IN CONCRETE, TYP
2. FOOTING NOT SHOWN FOR CLARITY. AT CONFLICTS BETWEEN TANK FOOTING AND RET. WALL FOOTING, CONTRACTOR TO ENSURE DOWELS OR FORM SAVERS ARE PROVIDED PRIOR TO POURING CONCRETE.

2 ISOLATION JOINT BETWEEN TANK & RETAINING WALLS
2-S-1 1" = 1'-0"

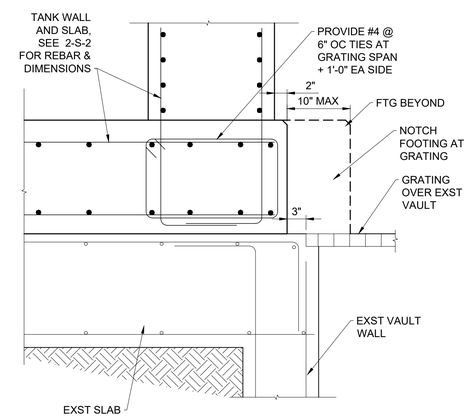

3 FOOTING NOTCH AT DRAIN INLET, TANK #1
2-S-1 1" = 1'-0"

VERIFY SCALE
BAR IS ONE INCH ON ORIGINAL DRAWING
0 1"
IF NOT ONE INCH ON THIS SHEET, ADJUST SCALES ACCORDINGLY

NO	DATE	REVISION	BY	APVD

FOR REFERENCE ONLY
PROJECT MANAGER RFP
(NOT FOR CONSTRUCTION)

REGISTERED PROFESSIONAL ENGINEER JOSEPH A. VIERRA No. C66413 CIVIL STATE OF CALIFORNIA 3/25/2024

DESIGN H. MEHERE
DRAWN H. MEHERE
CHECKED M. PUHLMANN
APPROVED M. PUHLMANN

WATERWORKS ENGINEERS
760 CYPRESS AVE SUITE 201, REDDING, CA 96001

PARADISE IRRIGATION DISTRICT
WASHWATER EQUALIZER TANK REPLACEMENT PROJECT
PARADISE, CA

STRUCTURAL
CONCRETE DETAILS

DATE MARCH 2024
PROJECT NO. 22-098
DRAWING NO. 1-S-4
SHEET NO. 19

FILENAME: L:\CAD\Projects\22-098 PID WTP Equalizer Tank Replacement\07 Drawings\2298D-10S204.dwg
PLOT DATE: 3/25/2024 PLOT TIME: 4:46:11 AM

GENERAL NOTES

1. FABRICATE PIPE SUPPORT FROM TYPE 316L STAINLESS STEEL.
2. PROVIDE STAINLESS STEEL FASTENERS FOR ALL CONNECTIONS.

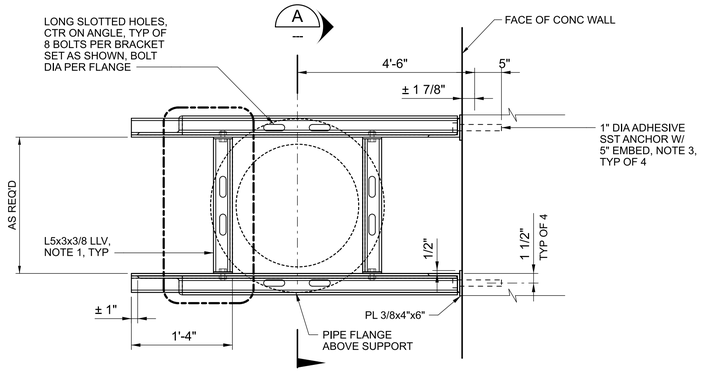

PLAN
NTS

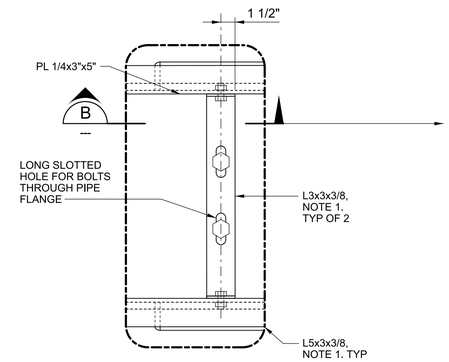

PARTIAL PLAN
NTS

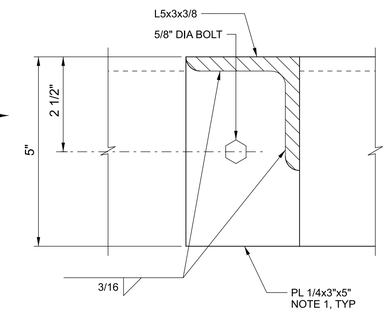

B SECTION
--- NTS

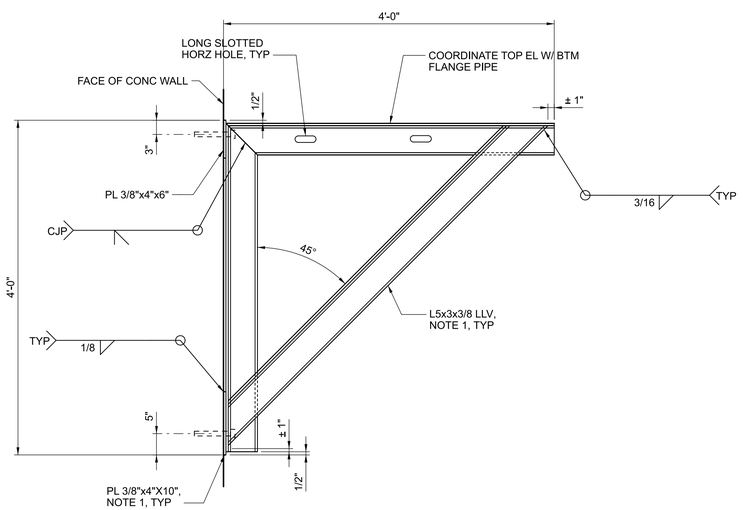

A SECTION
--- NTS

VERIFY SCALE

BAR IS ONE INCH ON ORIGINAL DRAWING

0 1"

IF NOT ONE INCH ON THIS SHEET, ADJUST SCALES ACCORDINGLY

NO	DATE	REVISION	BY	APVD

FOR REFERENCE ONLY
PROJECT MANAGER RFP
(NOT FOR CONSTRUCTION)

REGISTERED PROFESSIONAL ENGINEER — JOSEPH A. RIESS — No. C66413 — CIVIL — STATE OF CALIFORNIA — 3/25/2024

DESIGN: H. MEHERE
DRAWN: J. MARTIN
CHECKED: J. RIESS
APPROVED: M. PUHLMANN

WATERWORKS ENGINEERS
760 CYPRESS AVE SUITE 201, REDDING, CA. 96001

PARADISE IRRIGATION DISTRICT

WASHWATER EQUALIZER TANK REPLACEMENT PROJECT

PARADISE, CA

STRUCTURAL

OVERFLOW PIPE SUPPORT DETAIL

DATE: MARCH 2024
PROJECT NO.: 22-098
DRAWING NO.: 1-S-5
SHEET NO.: 20

FILENAME: L:\CAD\Projects\22-098 PID WTP Equalizer Tank Replacement\07 Drawings\2298D-10S203.dgn

PLOT DATE: 3/25/2024 PLOT TIME: 3:14:23 AM

GENERAL NOTES

1. RECONSTRUCT SECTION OF DEMOLISHED 1'-6" THICK CONC SLAB AFTER 10" BRW PIPE INSTALLATION AND CONCRETE ENCASEMENT. PROVIDE #6 @ 12" EW TOP AND #8 @ 12" BOT TO MATCH EXST SLAB. CONNECT TO EXST SLAB PER STD DTL 03 12 03.01.
2. PROVIDE HDG UNISTRUT BRACE FROM EACH STRINGER TO ADJACENT WALL FOR SWAY BRACING. LOCATE BRACES APPROX 2'-0" FROM EACH END OF LANDING.
3. TYPICAL AL BEAM WALL CONNECTION, STD DTL 05 05 09.33.
4. TYPICAL AL FRAMING CONNECTION, STD DTL 05 05 09.43.

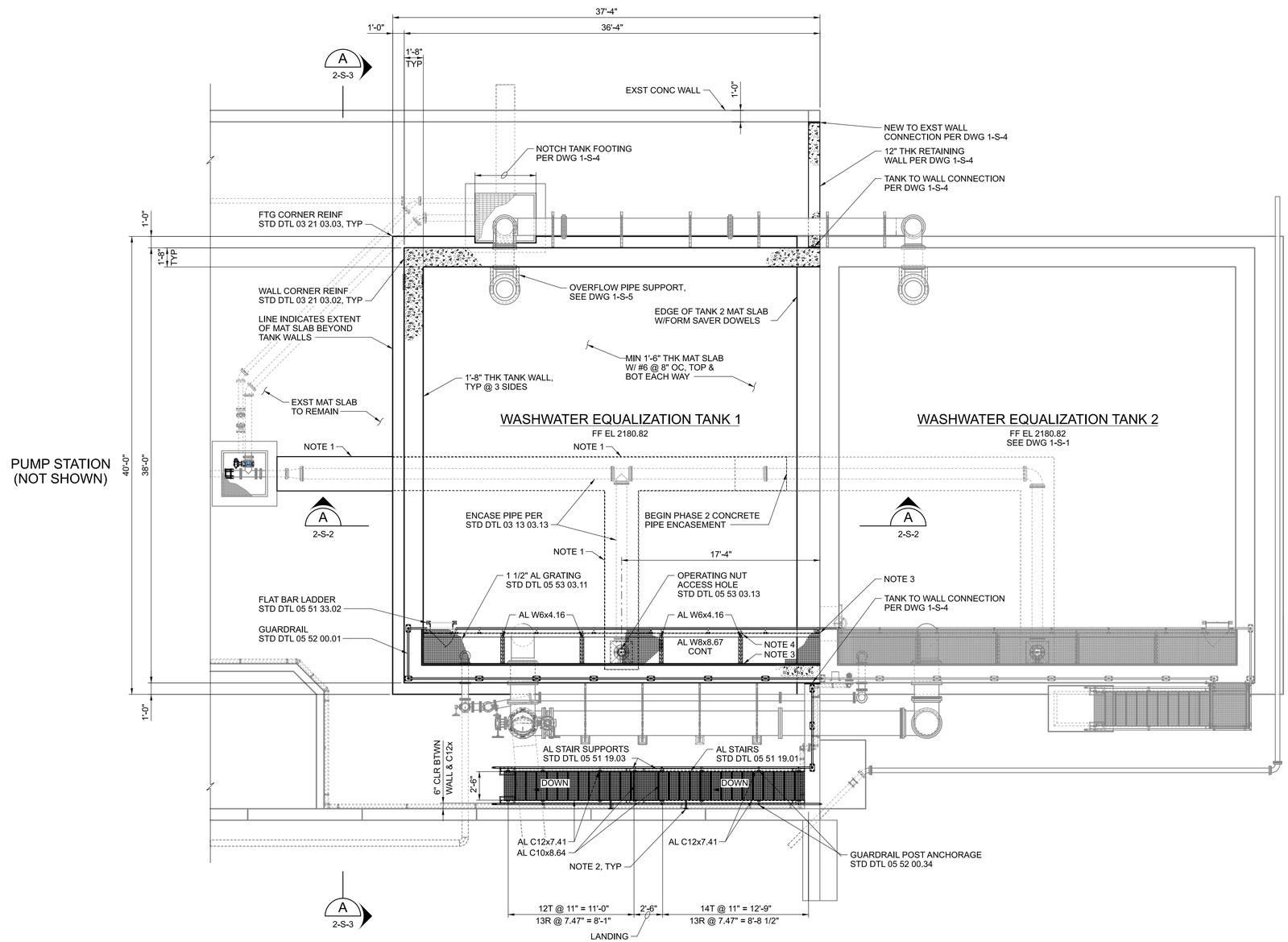

PLAN

3/16"=1'-0"

4 0 4 8 FEET
SCALE 3/16"=1'-0"

VERIFY SCALE
BAR IS ONE INCH ON ORIGINAL DRAWING
0 1"
IF NOT ONE INCH ON THIS SHEET, ADJUST SCALES ACCORDINGLY

NO	DATE	REVISION	BY	APVD

FOR REFERENCE ONLY
PROJECT MANAGER RFP
(NOT FOR CONSTRUCTION)

REGISTERED PROFESSIONAL ENGINEER JOSEPH A. RIESS No. C66413 CIVIL STATE OF CALIFORNIA 3/25/2024

DESIGN: H. MEHERE
DRAWN: J. MARTIN
CHECKED: J. RIESS
APPROVED: M. PUHLMANN

WATERWORKS ENGINEERS
760 CYPRESS AVE SUITE 201, REDDING, CA. 96001

PARADISE IRRIGATION DISTRICT
WASHWATER EQUALIZER TANK REPLACEMENT PROJECT
PARADISE, CA

STRUCTURAL
PHASE 2
TANK 1 PLAN

DATE: MARCH 2024
PROJECT NO. 22-098
DRAWING NO. 2-S-1
SHEET NO. 21

FILENAME: L:\CAD\Projects\22-098 PID WTP Equalizer Tank Replacement\07 Drawings\2298D-20S101.dgn
PLOT DATE: 3/25/2024 PLOT TIME: 5:57:29 AM

GENERAL NOTES

1. PROVIDE ADDITIONAL REINFORCEMENT AT 6'-0" SQ AREA AT WALL CORNERS. PROVIDE #6 HORIZ BARS @ 8" OC, SPACING AT CORNER INTERSECTIONS TO BE 4" OC, TYP.
2. PROVIDE 3/4" CHAMFER AT ALL TANK WALL EDGES.

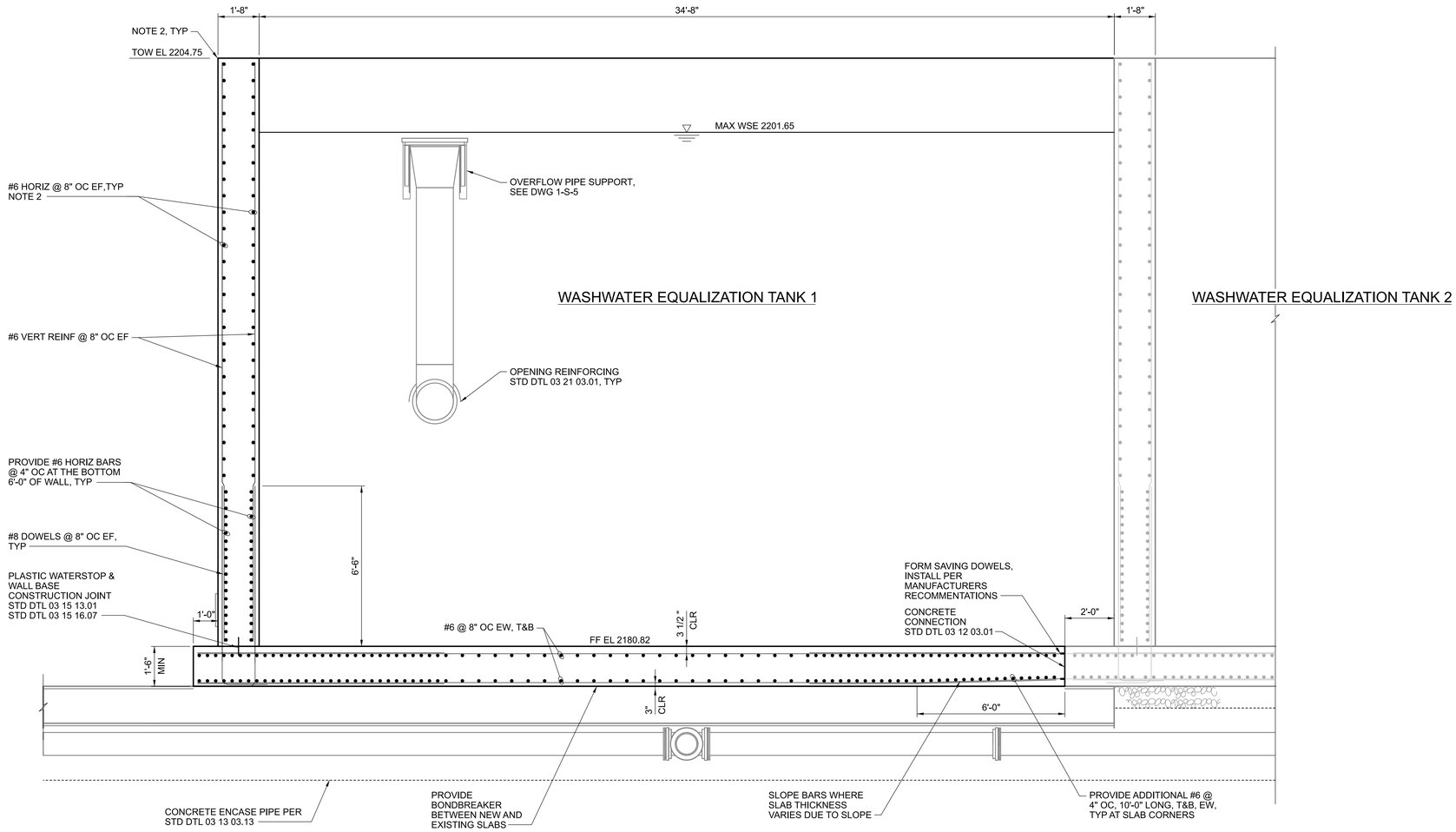

A SECTION
2-S-1 3/8"=1'-0"

2 0 2 4 FEET
SCALE 3/8"=1'-0"

VERIFY SCALE
BAR IS ONE INCH ON ORIGINAL DRAWING
0 1"
IF NOT ONE INCH ON THIS SHEET, ADJUST SCALES ACCORDINGLY

NO	DATE	REVISION	BY	APVD

FOR REFERENCE ONLY
PROJECT MANAGER RFP
(NOT FOR CONSTRUCTION)

REGISTERED PROFESSIONAL ENGINEER JOSEPH A. RIESS No. C66413 CIVIL STATE OF CALIFORNIA 3/25/2024

DESIGN H. MEHERE
DRAWN J. MARTIN
CHECKED J. RIESS
APPROVED M. PUHLMANN

WATERWORKS ENGINEERS
760 CYPRESS AVE SUITE 201, REDDING, CA. 96001

PARADISE IRRIGATION DISTRICT
WASHWATER EQUALIZER TANK REPLACEMENT PROJECT
PARADISE, CA

STRUCTURAL
PHASE 2
TANK 1 SECTION

DATE MARCH 2024
PROJECT NO. 22-098
DRAWING NO. 2-S-2
SHEET NO. 22

FILENAME: L:\CAD\Projects\22-098 PID WTP Equalizer Tank Replacement\07 Drawings\2298D-20S201.dgn
PLOT DATE: 3/25/2024 PLOT TIME: 3:28:46 AM

GENERAL NOTES

1. SEE DWGS 2 S-1 AND 2-S-2 FOR DETAILS NOT SHOWN ON THIS DWG.

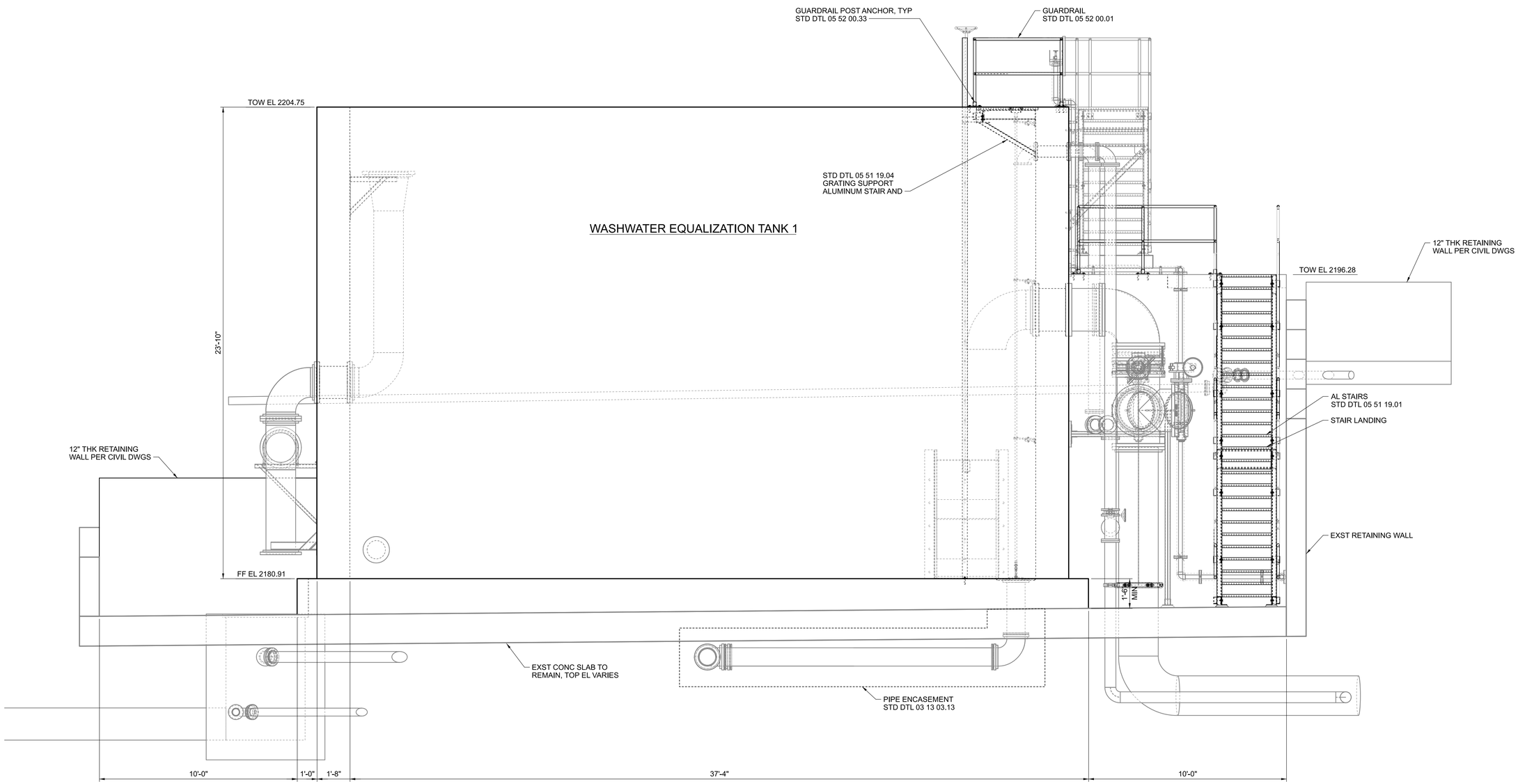

X / X-XXX — SECTION 3/8"=1'-0"

VERIFY SCALE

BAR IS ONE INCH ON ORIGINAL DRAWING

0 1"

IF NOT ONE INCH ON THIS SHEET, ADJUST SCALES ACCORDINGLY

NO	DATE	REVISION	BY	APVD

FOR REFERENCE ONLY
PROJECT MANAGER RFP
(NOT FOR CONSTRUCTION)

REGISTERED PROFESSIONAL ENGINEER — JOSEPH A. RIESS — No. C66413 — CIVIL — STATE OF CALIFORNIA — 3/25/2024

DESIGN: H. MEHERE
DRAWN: J. RIESS
CHECKED: J. RIESS
APPROVED: M. PUHLMANN

WATERWORKS ENGINEERS
760 CYPRESS AVE SUITE 201, REDDING, CA. 96001

PARADISE IRRIGATION DISTRICT

WASHWATER EQUALIZER TANK REPLACEMENT PROJECT

PARADISE, CA

STRUCTURAL

PHASE2
TANK 1 SECTION

DATE: MARCH 2024
PROJECT NO.: 22-098
DRAWING NO.: 2-S-3
SHEET NO.: 23

FILENAME: L:\CAD\Projects\22-098 PID WTP Equalizer Tank Replacement\07 Drawings\2298D-20S202.dgn

PLOT DATE: 3/25/2024 PLOT TIME: 3:16:27 AM

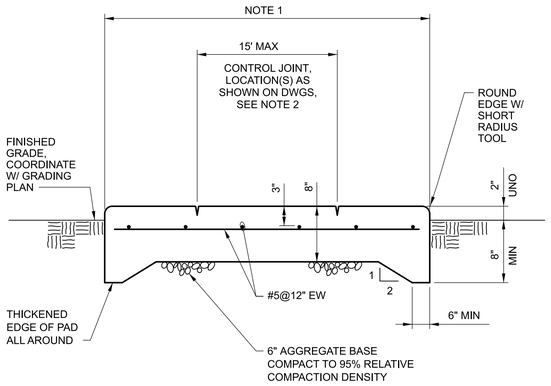

NOTES:

1. CONCRETE PAD, SIZED PER DRAWINGS.
2. CONTROL JOINT SHALL BE FORMED IN FRESH CONCRETE BY HAND TOOLING OR SAW CUTTING.

CONCRETE SLAB ON GRADE (03 11 41.02)

NTS

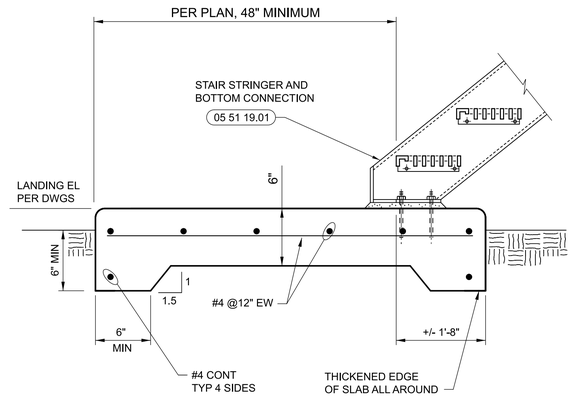

NOTE:

LANDING WIDTH MINIMUM OF CLEAR STAIR WIDTH PLUS 1'-0".

CONCRETE STAIR LANDING (03 11 41.03)

NTS

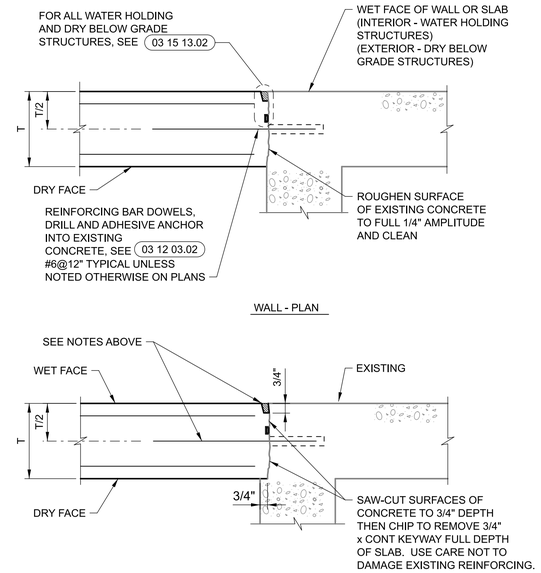

CONNECTION OF NEW CONCRETE TO EXISTING (03 12 03.01)

NTS

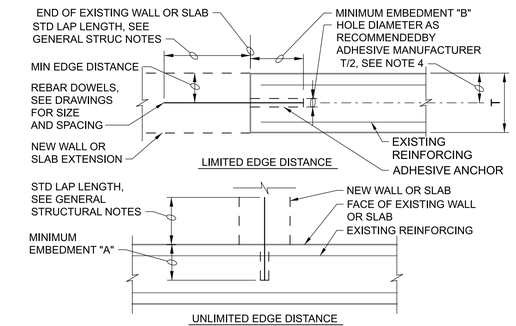

DOWEL SIZE	MINIMUM EDGE DIST	MINIMUM EMBEDMENT A	MINIMUM EMBEDMENT B
#3	2 1/2"	5"	8"
#4	3 1/2"	7"	11"
#5	4"	8"	13"
#6	5"	10 1/2"	16"
#7	6"	12 1/2"	20"
#8	7"	14"	22"
#9	7 1/2"	15"	24"

NOTES:

1. CONFORM TO THE REQUIREMENTS OF SPECIFICATION SECTION 05 05 06, ANCHORS, INSERTS AND DOWELS.
2. FOLLOW ADHESIVE MANUFACTURER'S INSTRUCTIONS FOR INSTALLATION.
3. USE MINIMUM EMBEDMENTS SHOWN, EXCEPT USE MANUFACTURER'S MINIMUM RECOMMENDED EMBEDMENT IF GREATER.
4. LOCATE DOWELS CENTERED IN WALL OR SLAB UNLESS OTHERWISE NOTED ON DRAWINGS. WHERE 2 ROWS OF DOWELS INDICATED, STAGGER SPACING & LOCATE ALTERNATING DOWELS AT MINIMUM EDGE DISTANCE FROM OPPOSITE FACES.

DRILL - IN DOWELS (03 12 03.02)

NTS

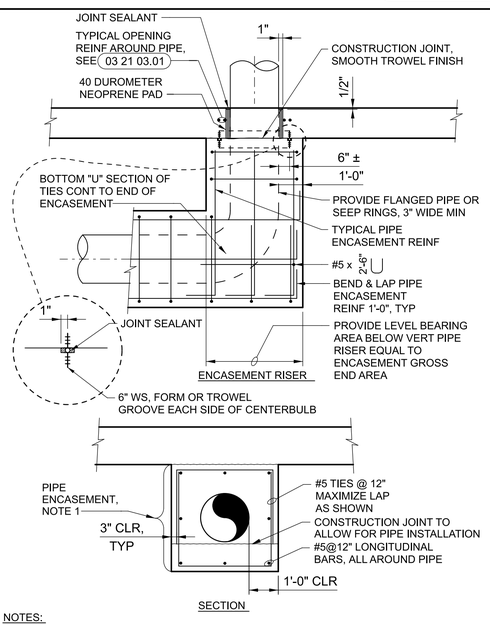

NOTES:

1. EXTEND PIPE ENCASEMENT TO BOTTOM OF SLAB IF BOTTOM OF SLAB IS WITHIN 1-FOOT OF TOP OF PIPE ENCASEMENT, OTHERWISE, PROVIDE ENCASEMENT ONLY WITH ENCASEMENT RISER WHERE PIPE PENETRATES SLAB.

PIPE ENCASEMENT - WATERTIGHT (03 13 03.13)

NTS

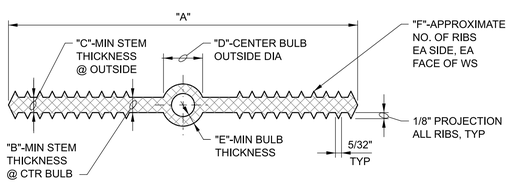

SIZE	"A"	"B"	"C"	"D"	"E"	"F"
4"x3/16"	4"	3/16"	3/16"	3/4"	1/4"	4
6"x3/8"	6"	3/8"	3/8"	7/8"	1/4"	6
9"x3/8"	9"	3/8"	3/8"	1"	1/4"	8

NOTES:

1. NON-ROUND CENTER BULBS SHALL HAVE A MINIMUM OUTSIDE DIMENSION OF 'D'.
2. SEE SPLICE DETAIL 03 15 13.03
3. BULB TYPE WATERSTOP SHOWN IS REQUIRED FOR EXPANSION AND CONTROL JOINTS. SIMILAR WATERSTOPS WITHOUT CENTER BULB MAY BE SUBSTITUTED AT CONSTRUCTION JOINTS.
4. USE 6 INCH WATERSTOPS IN ALL CONSTRUCTION JOINTS UNLESS SPECIFICALLY SHOWN OTHERWISE.

PLASTIC WATERSTOP (03 15 13.01)

NTS

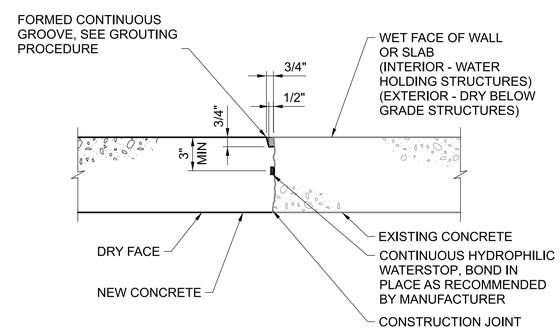

NOTE:

FOR USE IN NON-MOVING CONSTRUCTION JOINTS AND ONLY WHERE SPECIFICALLY INDICATED ON PLANS.

GROUTING PROCEDURE:

1. WAIT UNTIL NEW CONCRETE MINIMUM 28 DAYS OLD PRIOR TO GROUTING GROOVE.
2. ROUGHEN AND CLEAN SURFACES OF GROOVE WITH POWER WIRE BRUSH OR SANDBLASTING.
3. SATURATE AREA FOR 24 HOURS PRIOR TO GROUTING.
4. DRY PACK WITH TYPE II NON-SHRINK GROUT.
5. USE STEEL HAMMER AND STEEL TOOL TO DENSELY PACK GROUT INTO GROOVE.
6. WATER CURE GROUT FOR 4 DAYS MINIMUM.

HYDROPHILIC AND GROOVE WATERSTOP (03 15 13.02)

NTS

VERIFY SCALE

BAR IS ONE INCH ON ORIGINAL DRAWING

0 1"

IF NOT ONE INCH ON THIS SHEET, ADJUST SCALES ACCORDINGLY

NO	DATE	REVISION	BY	APVD

FOR REFERENCE ONLY
PROJECT MANAGER RFP
(NOT FOR CONSTRUCTION)

REGISTERED PROFESSIONAL ENGINEER JOSEPH A. RIESS No. C66413 CIVIL STATE OF CALIFORNIA 3/25/2024

DESIGN H. MEHERE
DRAWN J. MARTIN
CHECKED J. RIESS
APPROVED M. PUHLMANN

WATERWORKS ENGINEERS
760 CYPRESS AVE SUITE 201, REDDING, CA. 96001

PARADISE IRRIGATION DISTRICT

WASHWATER EQUALIZER TANK REPLACEMENT PROJECT

PARADISE, CA

STRUCTURAL

STANDARD DETAILS

DATE MARCH 2024
PROJECT NO. 22-098
DRAWING NO. SSD-1
SHEET NO. 24

FILENAME: L:\CAD\Projects\22-098 PID WTP Equalizer Tank Replacement\07 Drawings\2298D-SSD001.dgn PLOT DATE: 3/25/2024 PLOT TIME: 5:36:17 AM

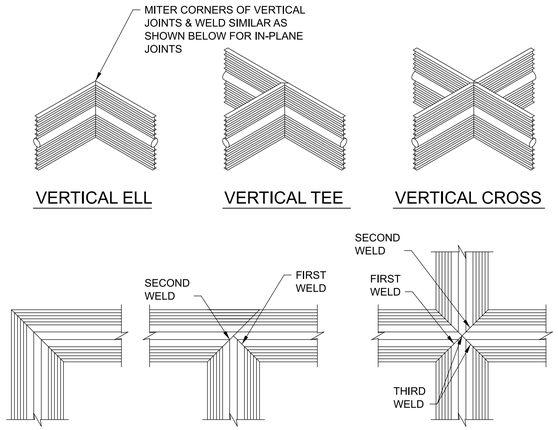

NOTE:

ALL WELDS SHALL BE PER WATERSTOP MANUFACTURER'S RECOMMENDATIONS.

WATERSTOP JOINTS

NTS

03 15 13.03

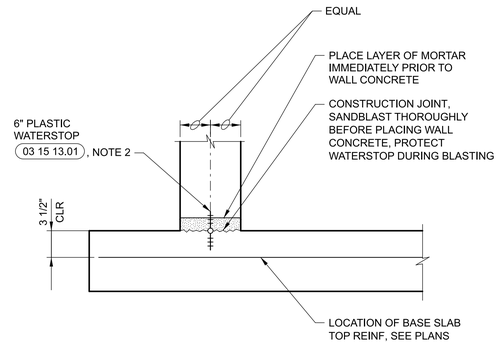

NOTES:

1. FOR WALLS WITH SINGLE MAT OF REINFORCING LOCATE WATERSTOP ON LIQUID FACE, 1" CLEAR OF REINFORCEMENT.
2. SECURE WATERSTOP IN-PLACE AS SPECIFIED.

WALL BASE CONSTRUCTION JOINT

NTS

03 15 16.07

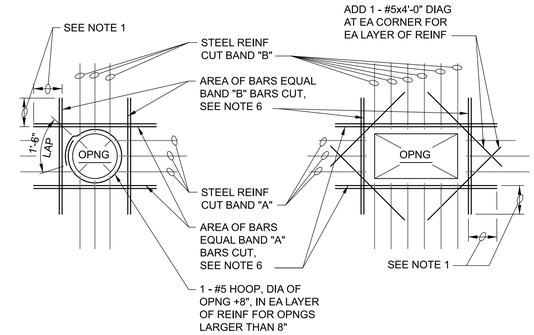

NOTES:

1. PROVIDE MINIMUM LAP, SEE GENERAL STRUCTURAL NOTES. WHERE FULL LAP LENGTH CANNOT BE ACHIEVED DUE TO SLAB OR WALL EDGE, TERMINATE BARS WITH A STANDARD 90 DEGREE BEND 2 INCHES CLEAR OF SLAB OR WALL EDGE. ROTATE HOOKS AS REQUIRED TO MAINTAIN CONCRETE COVER.
2. TYPICAL FOR ALL OPENINGS IN CONCRETE WALLS OF BELOW GRADE AND HYDRAULIC STRUCTURES AND ALL STRUCTURAL CONCRETE SLABS UNLESS INDICATED OTHERWISE ON PLANS.
3. DO NOT WELD REINFORCEMENT TO PIPE SLEEVES AND INSERTS.
4. PROVIDE A MINIMUM OF 2 "A" BARS AND 2 "B" BARS EACH SIDE OF OPENING (1 EACH FACE).
5. FOR OPENINGS LARGER THAN 8'-0", REINFORCE SAME AS FOR 8'-0" OPENINGS.
6. SPACE AT 3 BAR DIAMETERS (OR 3" MINIMUM) ON CENTER.

OPENING REINFORCING

NTS

03 21 03.01

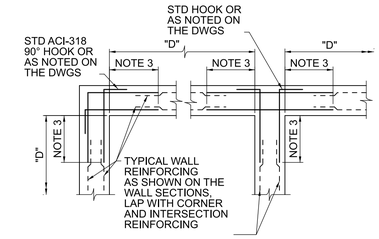

PLAN
DOUBLE REINFORCING MAT

NOTES:

1. TYPICAL HORIZONTAL WALL CORNER AND INTERSECTION REINFORCING LAYOUT IS SHOWN. FOR SIZE AND SPACING, SEE PLANS.
2. WHERE THE CORNER OR INTERSECTION REINFORCING SIZE AND SPACING IS NOT SHOWN, NOTED OR TABULATED ON THE PLANS, THE SIZE AND SPACING SHALL BE THE SAME AS THE WALL HORIZONTAL REINFORCING SHOWN ON THE WALL SECTIONS OR AS NOTED FOR THE REINFORCING BETWEEN THE CORNERS OR INTERSECTIONS.
3. EXCEPT WHERE OTHERWISE SHOWN ON THE DRAWINGS, THE LENGTH INDICATED AS "NOTE 3" SHALL BE THE LESSER OF D/4, 8 FEET, OR 1.0 TIMES THE HEIGHT OF THE WALL, EXCEPT THAT IN NO CASE SHALL IT BE LESS THAN 2.0 FEET.
4. D = LEMGTH OF WALL PARALLEL TO THE BAR LENGTH IN QUESTION.
5. USE THE LAP LENGTH AS REQUIRED FOR THE SMALLER OF THE TWO REINFORCING BARS BEING SPLICED, SEE CONCRETE REINFORCING NOTES.

TYPICAL WALL CORNER AND INTERSECTION REINFORCING (PAGE 1 OF 2)

NTS

03 21 03.02

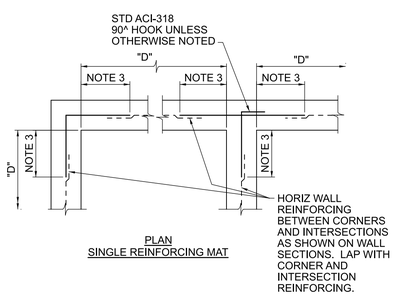

PLAN
SINGLE REINFORCING MAT

TYPICAL WALL CORNER AND INTERSECTION REINFORCING (PAGE 2 OF 2)

NTS

03 21 03.02

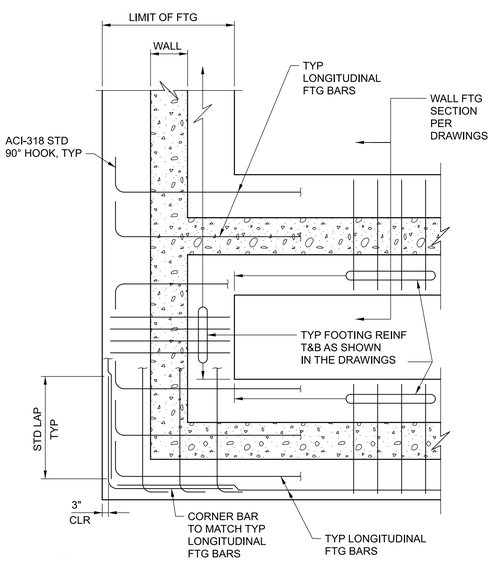

NOTES:

1. STAGGER CENTER-TO-CENTER SPACING OF PARALLEL LAP SPLICES NOT LESS THAN ONE LAP LENGTH OR 3'-0" MINIMUM.

TYPICAL FOOTING CORNER AND INTERSECTION REINFORCING

NTS

03 21 03.03

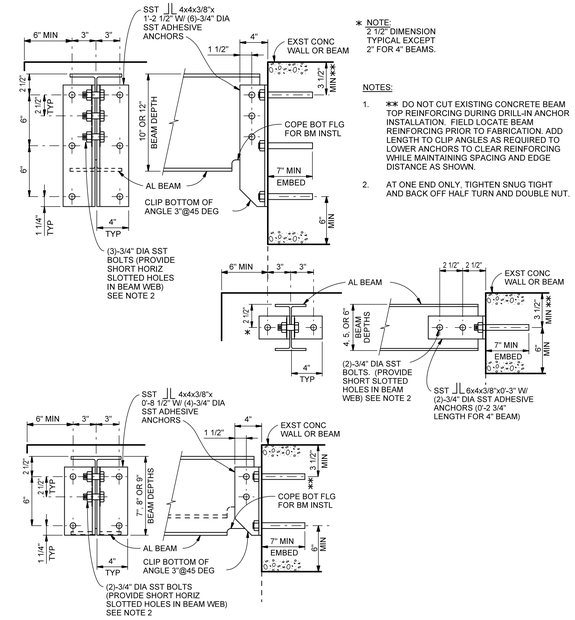

✱ NOTE:
2 1/2" DIMENSION TYPICAL EXCEPT 2" FOR 4" BEAMS.

NOTES:

1. ✱✱ DO NOT CUT EXISTING CONCRETE BEAM TOP REINFORCING DURING DRILL-IN ANCHOR INSTALLATION. FIELD LOCATE BEAM REINFORCING PRIOR TO FABRICATION. ADD LENGTH TO CLIP ANGLES AS REQUIRED TO LOWER ANCHORS TO CLEAR REINFORCING WHILE MAINTAINING SPACING AND EDGE DISTANCE AS SHOWN.
2. AT ONE END ONLY, TIGHTEN SNUG TIGHT AND BACK OFF HALF TURN AND DOUBLE NUT.

BEAM OR WALL CONNECTION - ALUMINUM

NTS

05 05 09.33

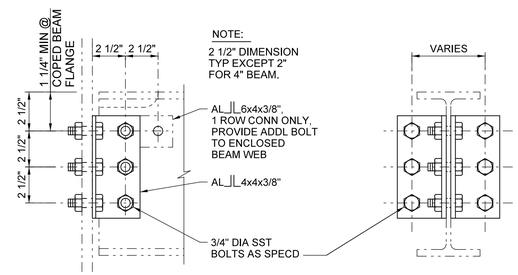

ALUMINUM		
NOMINAL BEAM DEPTH, INCHES	ROWS OF BOLTS	LENGTH OF ANGLE
10 - 12	3	7 1/2"
7-8-9	2	5"
5-6	1	3"
4	1	2 3/4"

NOTES:

1. NUMBER OF ROWS IS EQUAL TO NUMBER OF BOLTS TO ENCLOSED WEB.
2. ALL FRAMING CONNECTIONS SHALL CONFORM TO SCHEDULE UNLESS DETAILED OTHERWISE ON FRAMING PLANS.

TYPICAL FRAMING CONNECTION - ALUMINUM

NTS

05 05 09.43

VERIFY SCALE

BAR IS ONE INCH ON ORIGINAL DRAWING

0 1"

IF NOT ONE INCH ON THIS SHEET, ADJUST SCALES ACCORDINGLY

NO	DATE	REVISION	BY	APVD

FOR REFERENCE ONLY
PROJECT MANAGER RFP
(NOT FOR CONSTRUCTION)

REGISTERED PROFESSIONAL ENGINEER JOSEPH A. RIESS No. C66413 CIVIL STATE OF CALIFORNIA 3/25/2024

DESIGN H. MEHERE
DRAWN J. MARTIN
CHECKED J. RIESS
APPROVED M. PUHLMANN

WATERWORKS ENGINEERS
760 CYPRESS AVE SUITE 201, REDDING, CA. 96001

PARADISE IRRIGATION DISTRICT

WASHWATER EQUALIZER TANK REPLACEMENT PROJECT

PARADISE, CA

STRUCTURAL

STANDARD DETAILS

DATE MARCH 2024
PROJECT NO. 22-098
DRAWING NO. SSD-2
SHEET NO. 25

FILENAME: L:\CAD\Projects\22-098 PID WTP Equalizer Tank Replacement\07 Drawings\2298D-SSD001.dgn

PLOT DATE: 3/25/2024 PLOT TIME: 5:48:01 AM

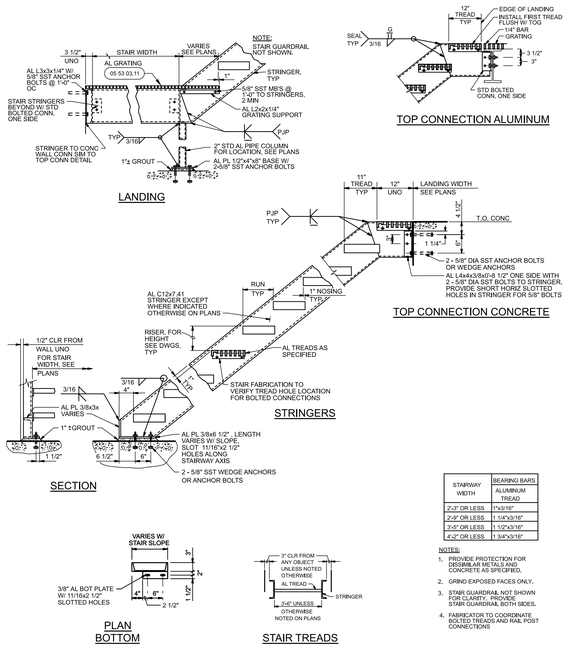

STAIRWAY WIDTH	BEARING BARS ALUMINUM TREAD
2'-3" OR LESS	1"x3/16"
2'-9" OR LESS	1 1/4"x3/16"
3'-5" OR LESS	1 1/2"x3/16"
4'-2" OR LESS	1 3/4"x3/16"

NOTES:

1. PROVIDE PROTECTION FOR DISSIMILAR METALS AND CONCRETE AS SPECIFIED,
2. GRING EXPOSED FACES ONLY.
3. STAIR GUARDRAIL NOT SHOWN FOR CLARITY. PROVIDE STAIR GUARDRAIL BOTH SIDES.
4. FABRICATOR TO COORDINATE BOLTED TREADS AND RAIL POST CONNECTIONS

ALUMINUM STAIRS

NTS

05 51 19.01

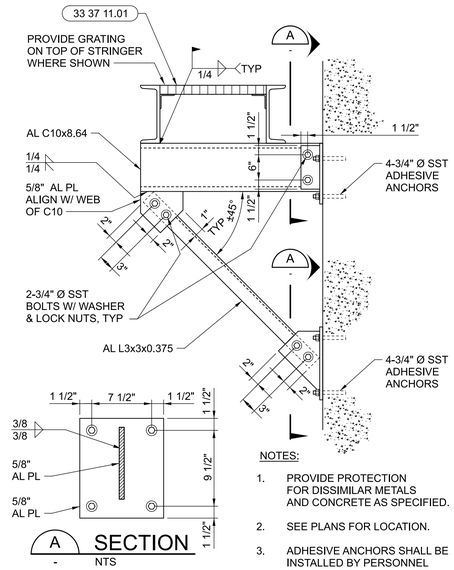

NOTES:

1. PROVIDE PROTECTION FOR DISSIMILAR METALS AND CONCRETE AS SPECIFIED.
2. SEE PLANS FOR LOCATION.
3. ADHESIVE ANCHORS SHALL BE INSTALLED BY PERSONNEL CERTIFIED BY THE ACI/CRSI ADHESIVE ANCHOR INSTALLER CERTIFICATION PROGRAM.

ALUMINUM STAIR SUPPORT

NTS

05 51 19.03

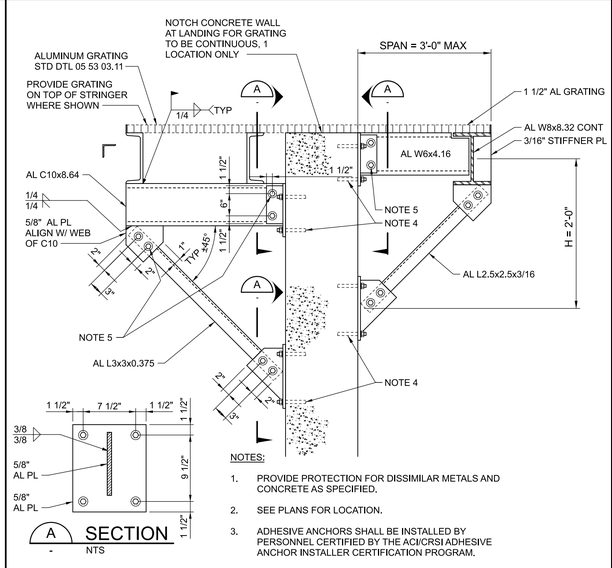

NOTES:

1. PROVIDE PROTECTION FOR DISSIMILAR METALS AND CONCRETE AS SPECIFIED.
2. SEE PLANS FOR LOCATION.
3. ADHESIVE ANCHORS SHALL BE INSTALLED BY PERSONNEL CERTIFIED BY THE ACI/CRSI ADHESIVE ANCHOR INSTALLER CERTIFICATION PROGRAM.
4. 4-3/4" DIA SST ADHESIVE ANCHORS.
5. 2-3/4" DIA SST BOLTS W/ WASHER & LOCK NUTS, TYP.

ALUMINUM STAIR AND LANDING SUPPORT

NTS

05 51 19.04

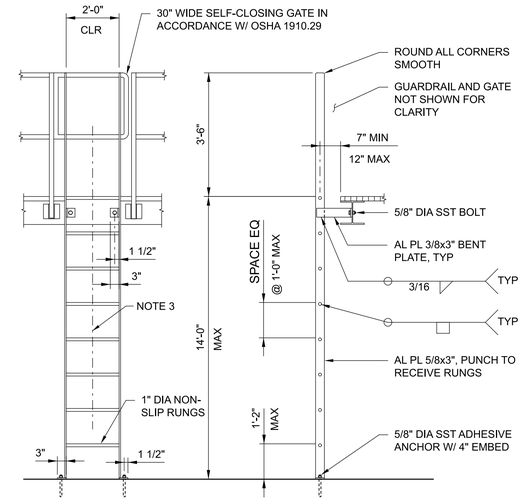

NOTES:

1. PROVIDE PROTECTION FOR ALUMINUM IN CONTACT WITH CONCRETE AS SPECIFIED.
2. GROUT LADDER BASE WITH NON-SHRINK GROUT AS REQUIRED FOR LEVELING.
3. PROVIDE SAF-T-CLIMB RAIL WHEN SHOWN ON THE DRAWINGS AND WHEN LADDER LENGTH EXCEEDS 20 FT.

FLAR BAR LADDER - ALUMINUM

NTS

05 51 33.02

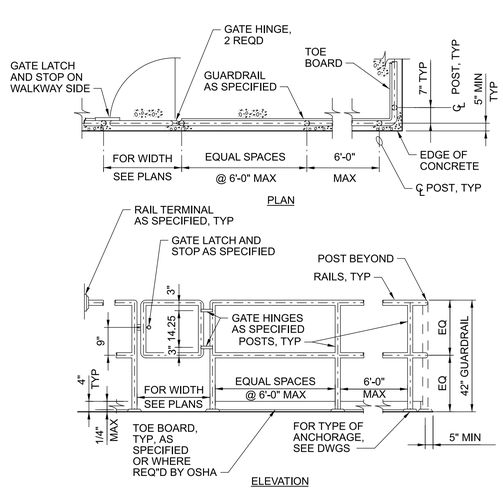

NOTE:

FOR GUARDRAIL MATERIAL REFERENCE DRAWINGS AND/OR JOB SPECIFICATIONS

TWO-RAIL GUARDRAIL

NTS

05 52 00.01

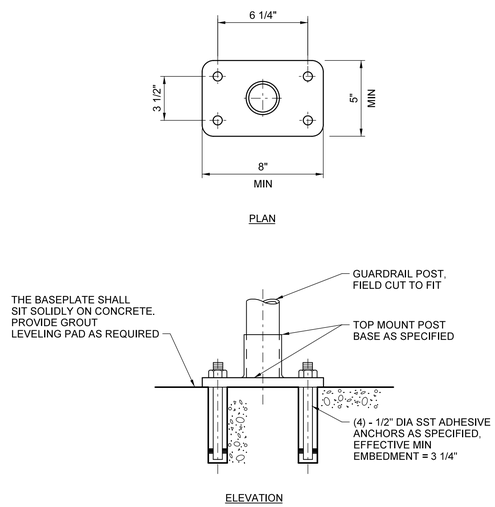

NOTES:

1. PROVIDE PROTECTION FOR DISSIMILAR METALS AND CONCRETE PER SPECIFICATIONS.

GUARDRAIL POST ANCHORAGE - TYPE C

NTS

05 52 00.33

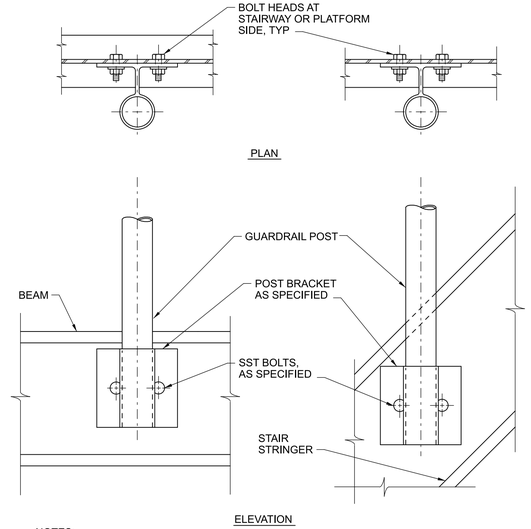

NOTES:

1. PROVIDE PROTECTION FOR DISSIMILAR METALS AND CONCRETE PER SPECIFICATIONS.
2. GUARDRAIL POST ANCHORAGE TO ALSO BE USED FOR HANDRAIL POST ANCHORAGE.
3. REFERENCE DRAWINGS AND OR SPECIFICATIONS FOR MATERIALS.

GUARDRAIL POST ANCHORAGE - TYPE D

NTS

05 52 00.34

VERIFY SCALE

BAR IS ONE INCH ON ORIGINAL DRAWING

0 1"

IF NOT ONE INCH ON THIS SHEET, ADJUST SCALES ACCORDINGLY

NO	DATE	REVISION	BY	APVD

FOR REFERENCE ONLY
PROJECT MANAGER RFP
(NOT FOR CONSTRUCTION)

REGISTERED PROFESSIONAL ENGINEER JOSEPH A. RIESS No. C66413 CIVIL STATE OF CALIFORNIA 3/25/2024

DESIGN H. MEHERE
DRAWN J. MARTIN
CHECKED J. RIESS
APPROVED M. PUHLMANN

WATERWORKS ENGINEERS
760 CYPRESS AVE SUITE 201, REDDING, CA. 96001

PARADISE IRRIGATION DISTRICT

WASHWATER EQUALIZER TANK REPLACEMENT PROJECT

PARADISE, CA

STRUCTURAL

STANDARD DETAILS

DATE MARCH 2024
PROJECT NO. 22-098
DRAWING NO. SSD-3
SHEET NO. 26

FILENAME: L:\CAD\Projects\22-098 PID WTP Equalizer Tank Replacement\07 Drawings\2298D-SSD001.dgn

PLOT DATE: 3/25/2024 PLOT TIME: 5:36:52 AM

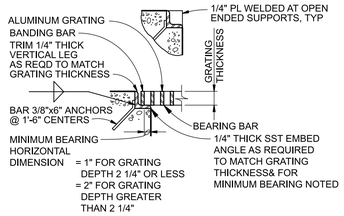

FOOT TRAFFIC

GRATING THICKNESS TABLE

MAXIMUM SPAN	ALUMINUM (IN.)
3'-6"	1 1/4"
4'-0"	1 1/2"
4'-6"	1 3/4"
5'-0"	1 3/4"
5'-6"	2"
6'-0"	2 1/4"
6'-6"	2 1/4"
7'-0"	2 1/2"

LEDGER ANGLE-SUPPORTED

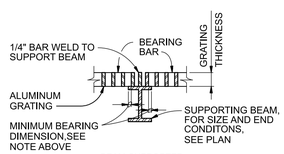

BEAM-SUPPORTED

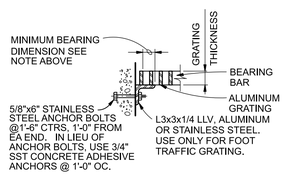

CONCRETE INSERT ANGLE-SUPPORTED

GRATING NOTES:

1. EXTEND GRATING CONTINUOUSLY OVER GATE GUIDES AND GATES.
2. NOTCH GRATING SUPPORTS AT GATES AS REQUIRED.
3. GRATING SPAN ←→ SEE PLAN.
4. WIDTH OF GRATING SECTIONS SHALL NOT EXCEED 3'-0" AND INDIVIDUAL SECTION WEIGHT SHALL NOT EXCEED 150 POUNDS.
5. SHOP DRAWINGS BASED ON FIELD DIMENSIONS SHALL BE SUBMITTED TO THE ENGINEER PRIOR TO FABRICATION.
6. MATERIAL FOR SUPPORTS OF ALUMINUM GRATING TO BE SAME AS GRATING, EXCEPT METAL SUPPORTS THAT ARE TO BE EMBEDED IN CONCRETE SHALL BE TYPE 316 STAINLESS STEEL.
7. UNLESS NOTED OTHERWISE ON PLANS, GRATING THICKNESS SHALL BE AS TABULATED IN "GRATING THICKNESS TABLE" FOR APPLICABLE TRAFFIC.
8. BEARING BAR THICKNESS FOR GRATING TO BE 3/16" MINIMUM.
9. BAND ALL EDGES WITH 3/16 x DEPTH OF BEARING BAR.
10. PROVIDE MISCELLANEOUS GRATING FASTENERS AS REQUIRED.
11. THE HORIZONTAL CLEARANCE BETWEEN THE GRATING AND GRATING SUPPORTS SHALL NOT BE LESS THAN 1/4" NOR GREATER THAN 1/2" AND AS SPECIFIED.
12. ALL GRATING SECTIONS, WHEN IN PLACE, SHALL ALWAYS BE FIRMLY ANCHORED TO THEIR SUPPORTS AS SPECIFIED.
13. PROVIDE SUPPORT TYPE SHOWN IN DRAWINGS OR MOST APPLICABLE FOR THE INSTALLATION CONDITIONS.

ALUMINUM GRATING

NTS

05 53 03.11

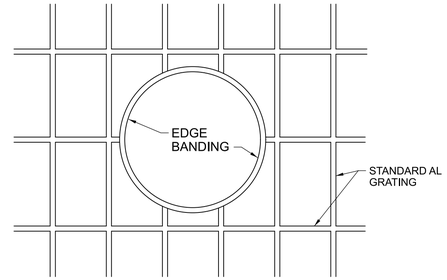

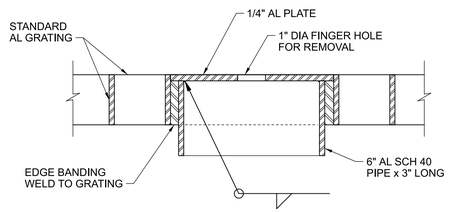

OPERATING NUT ACCESS HOLE

NTS

05 53 03.13

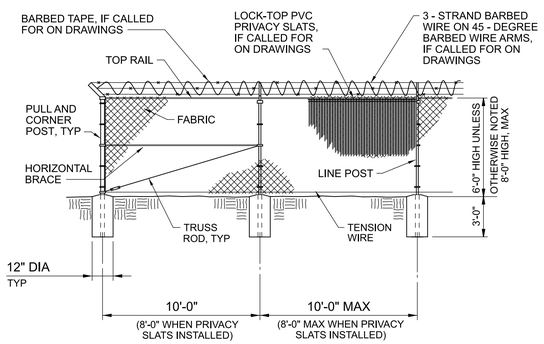

CHAINLINK FENCE

NTS

32 31 13.01

VERIFY SCALE

BAR IS ONE INCH ON ORIGINAL DRAWING

0 1"

IF NOT ONE INCH ON THIS SHEET, ADJUST SCALES ACCORDINGLY

NO	DATE	REVISION	BY	APVD

FOR REFERENCE ONLY
PROJECT MANAGER RFP
(NOT FOR CONSTRUCTION)

REGISTERED PROFESSIONAL ENGINEER JOSEPH A. RIESS No. C66413 CIVIL STATE OF CALIFORNIA 3/25/2024

DESIGN H. MEHERE
DRAWN J. MARTIN
CHECKED J. RIESS
APPROVED M. PUHLMANN

WATERWORKS ENGINEERS
760 CYPRESS AVE SUITE 201, REDDING, CA, 96001

PARADISE IRRIGATION DISTRICT

WASHWATER EQUALIZER TANK REPLACEMENT PROJECT

PARADISE, CA

STRUCTURAL

STANDARD DETAILS

DATE MARCH 2024
PROJECT NO. 22-098
DRAWING NO. SSD-4
SHEET NO. 27

FILENAME: L:\CAD\Projects\22-098 PID WTP Equalizer Tank Replacement\07 Drawings\2298D-SSD001.dgn

PLOT DATE: 3/25/2024 PLOT TIME: 5:37:11 AM

PIPE SYMBOLOGY

DOUBLE-LINE	SINGLE-LINE	DESCRIPTION
		EXISTING PIPE (SCREENED)
		NEW PIPE
		EXISTING PIPE TO BE ABANDONED
		EXISTING PIPE TO BE DEMOLISHED OR REMOVED AND SALVAGED

PIPE IDENTIFICATION

DOUBLE-LINE PIPES

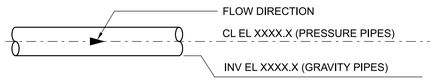

SINGLE-LINE PIPES

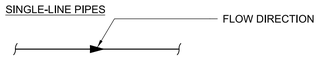

PIPE IDENTIFICATION

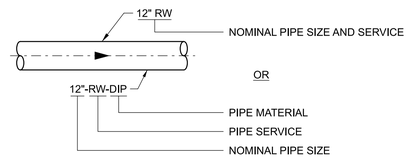

DOUBLE CONTAINED PIPING/TUBING IDENTIFICATION

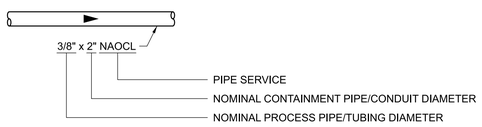

PIPING NOTES

1. LAY PIPE TO UNIFORM GRADE BETWEEN INDICATED ELEVATION POINTS. MINIMUM COVER SHALL BE 36 INCHES UNLESS OTHERWISE SHOWN.
2. SIZE OF FITTINGS SHOWN ON DRAWINGS SHALL CORRESPOND TO ADJACENT STRAIGHT RUN OF PIPE, UNLESS OTHERWISE INDICATED. TYPE OF JOINT AND FITTING MATERIAL SHALL BE THE SAME AS SHOWN FOR ADJACENT STRAIGHT RUN OF PIPE.
3. LOCATION AND NUMBER OF PIPE HANGERS AND PIPE SUPPORTS SHOWN IS ONLY APPROXIMATE. FINAL SUPPORT REQUIREMENTS SHALL BE DETERMINED IN THE FIELD AND APPROVED BY THE ENGINEER PRIOR TO INSTALLATION. MAXIMUM SPACING SHALL BE AS SPECIFIED.
4. APPROPRIATE STANDARD WALL PIPE DETAIL SHALL BE USED WHEREVER PIPING PASSES FROM A STRUCTURE TO BACKFILL.
5. ALL FLEXIBLE CONNECTORS OR FLANGED COUPLING ADAPTERS SHALL BE PROVIDED WITH THRUST TIES, THRUST BLOCKS, OR ANCHORS, UNLESS OTHERWISE NOTED. THRUST PROTECTION SHALL BE ADEQUATE FOR TEST PRESSURES SPECIFIED.
6. SYMBOLS, LEGENDS, AND PIPING IDENTIFIERS SHOWN SHALL BE FOLLOWED THROUGHOUT THE DRAWINGS, WHEREVER APPLICABLE. ALL OF THE VARIOUS APPLICATIONS ARE NOT NECESSARILY USED IN THE PROJECT.
7. ALL PIPING SPECIFIED TO BE PRESSURE TESTED, EXCEPT FLANGED, WELDED, GROOVED END, OR SCREWED PIPING, SHALL BE PROVIDED WITH THRUST PROTECTION AT ALL DIRECTION CHANGES, UNLESS OTHERWISE NOTED. SEE THRUST DETAILS AND NOTES ON DRAWINGS.
8. NUMBER AND LOCATION OF UNIONS SHOWN ON DRAWINGS ARE ONLY APPROXIMATE. PROVIDE ALL UNIONS NECESSARY TO FACILITATE CONVENIENT REMOVAL OF VALVES AND MECHANICAL EQUIPMENT.
9. THE CONTRACTOR FOR THIS PROJECT IS RESPONSIBLE FOR COORDINATING AND PERFORMING THE CONNECTION OF THE PIPING AND ASSOCIATED APPURTENANCES INSTALLED UNDER THIS CONTRACT TO BOTH THE EXISTING PIPING AND FACILITIES.
10. PRIOR TO SUBMITTING PIPING DRAWINGS FOR ANY NEW PIPE THAT IS TO CONNECT TO OR CROSS AN EXISTING PIPE OR STRUCTURE, THE CONTRACTOR SHALL EXPOSE THE EXISTING PIPE OR STRUCTURE TO VERIFY ITS EXACT LOCATION, SIZE, MATERIALS, AND INVERT ELEVATIONS.

PIPE SERVICES

ID	DESCRIPTION
BRW	BACKWASH RESIDUAL WATER (WASHWATER)
BSW	BACKWASH SUPPLY WATER
D	DRAIN
OF	OVERFLOW
2W	NONPOTABLE CITY WATER

MECHANICAL ABBREVIATIONS

ABBREVIATION	DEFINITION
ARV	AIR RELEASE VALVE
AVV	AIR/VACUUM VALVE
BAV	BALL VALVE
BF	BLIND FLANGE
BFP	BACKFLOW PREVENTER
BFV	BUTTERFLY VALVE
BO	BLOW OFF
BUNA-N	NITRILE BUTADIENE RUBBER
CAV	COMBINATION AIR VALVE
CE	CERAMIC EPOXY
CKV	CHECK VALVE
CLDIP	CEMENT-LINED DUCTILE IRON PIPE
CM	CEMENT MORTAR
CPLG	COUPLING
CPVC	CHLORINATED POLYVINYL CHLORIDE
CU	COPPER
CV	CONTROL VALVE
DIP	DUCTILE IRON PIPE
DMJ	DISMANTLING JOINT
DR	DRAIN
DV	DIAPHRAGM VALVE
EO	EMERGENCY OVERFLOW
EPDM	ETHYLENE PROPYLENE DIENE MONOMER
FBE	FUSION BONDED EPOXY
FC	FLEXIBLE COUPLING
FCA	FLANGED COUPLING ADAPTER
FES	FLARED END SECTION
FH	FIRE HYDRANT
FKM	FLUOROCARBON (FPM or VITON®)
FLG	FLANGE
FOE	FLANGED ONE END
FRP	FIBERGLASS REINFORCED PLASTIC
GAV	GATE VALVE
GEC	GROOVED END COUPLING
GLV	GLOBE VALVE
GRV	GROOVED END
HDPE	HIGH DENSITY POLYETHYLENE
HSV	HOSE VALVE
IE	INVERT ELEVATION
KGV	KNIFE GATE VALVE
LLDPE	LINEAR LOW DENSITY POLYETHYLENE
MDV	MUD VALVE
MJ	MECHANICAL JOINT
MON	WATER MONITOR
MPV	MULTI-PORT VALVE
NDV	NEEDLE VALVE
NPT	NATIONAL PIPE THREAD
PFA	PERFLUOROALKOXY
PLV	PLUG VALVE
PNV	PINCH VALVE
PO	PUSH ON JOINT
POE	PLAIN ONE END
PRJ	PROPRIETARY RESTRAINED JOINT
PRV	PRESSURE REGULATING VALVE
PTFE	POLYTETRAFLUOROETHYLENE (TEFLON®)
PVC	POLYVINYL CHLORIDE
RCP	REINFORCED CONCRETE PIPE
RFCA	RESTRAINED FLANGED COUPLING ADAPTER
RLS	RUBBER LINED STEEL
RMJ	RESTRAINED MECHANICAL JOINT
SAV	SAFETY VALVE
SLD	SOLDERED SOCKET JOINT
SLV	SOLVENT WELDED SOCKET JOINT
SOV	SOLENOID VALVE
SOW	SLIP ON WELD
TBG	TUBING
TDH	TOTAL DYNAMIC HEAD
THR	THREADED JOINT
TMV	THERMOSTATIC MIXING VALVE
TT	THRUST TIE
V	VENT
VAC	VACUUM
WLD	BUTT WELDED JOINT
WSP	WELDED STEEL PIPE

VERIFY SCALE

BAR IS ONE INCH ON ORIGINAL DRAWING

0 1"

IF NOT ONE INCH ON THIS SHEET, ADJUST SCALES ACCORDINGLY

NO	DATE	REVISION	BY	APVD

FOR REFERENCE ONLY
PROJECT MANAGER RFP
(NOT FOR CONSTRUCTION)

REGISTERED PROFESSIONAL ENGINEER JOSEPH A. RIESS No. C66413 CIVIL STATE OF CALIFORNIA 3/25/2024

DESIGN S. NILSEN
DRAWN J. MARTIN
CHECKED J. RIESS
APPROVED J. RIESS

WATERWORKS ENGINEERS
760 CYPRESS AVE SUITE 201, REDDING, CA. 96001

PARADISE IRRIGATION DISTRICT

WASHWATER EQUALIZER TANK REPLACEMENT PROJECT

PARADISE, CA

MECHANICAL

LEGEND AND NOTES

DATE MARCH 2024
PROJECT NO. 22-098
DRAWING NO. M-1
SHEET NO. X

FILENAME: L:\CAD\Projects\22-098 PID WTP Equalizer Tank Replacement\07 Drawings\2298D-M001.dgn

PLOT DATE: 3/25/2024 PLOT TIME: 3:21:54 AM

GENERAL NOTES

1. TEMPORARILY ROUTE 18" OF TO EXISTING DRAIN INLET. CONNECT TO TANK 1 OVER FLOW PIPING IN PHASE 2.
2. REMOVE EXST WHARF HYDRANT AND CONNECT TO EXST 2 1/2" 2W PIPING WITH 2 1/2" x 2" REDUCING TEE. REINSTALL WHARF HYDRANT ABOVE NEW TEE.

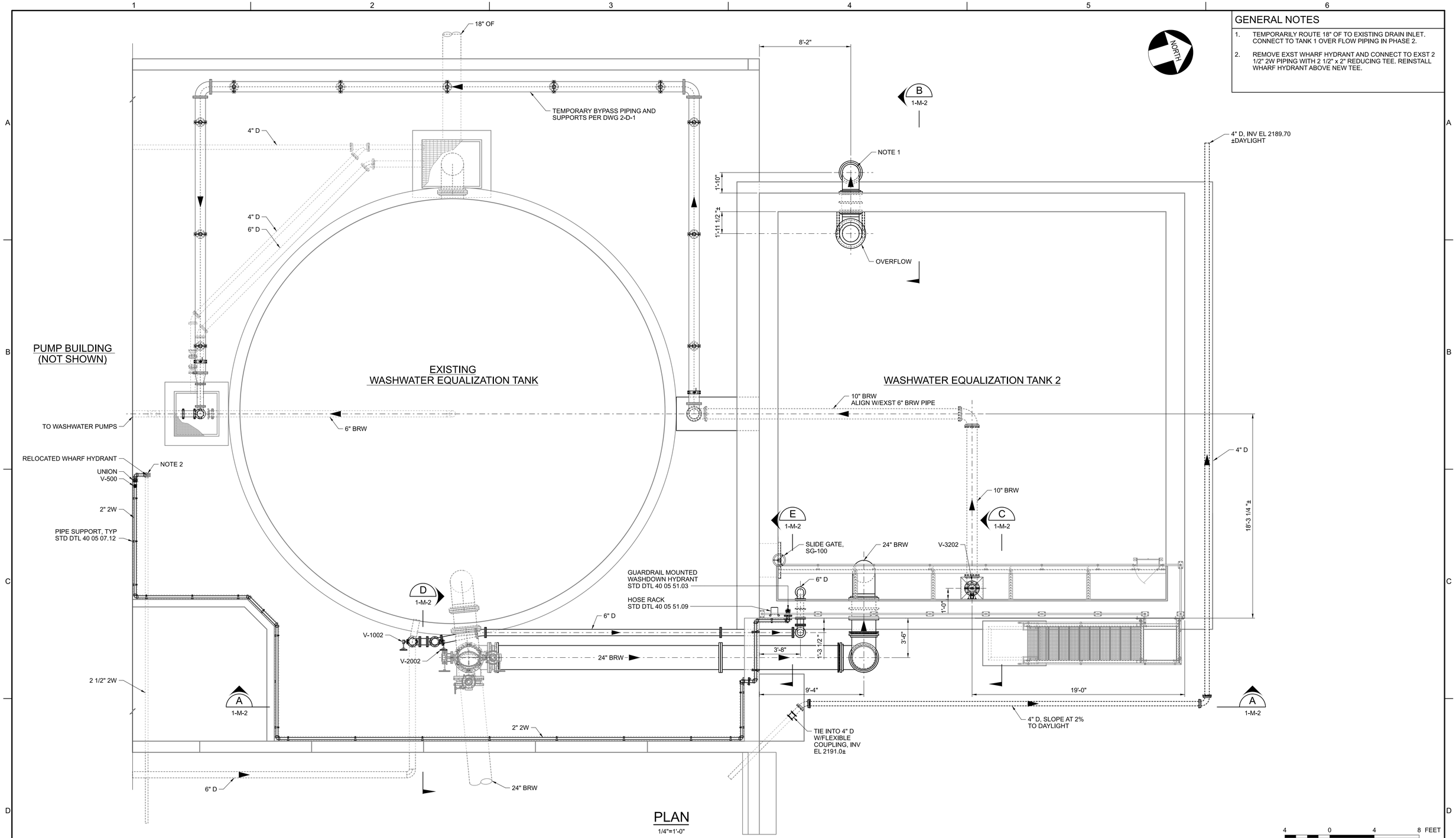

PLAN

1/4"=1'-0"

4 0 4 8 FEET

SCALE 1/4"=1'-0"

VERIFY SCALE

BAR IS ONE INCH ON ORIGINAL DRAWING

0 1"

IF NOT ONE INCH ON THIS SHEET, ADJUST SCALES ACCORDINGLY

NO	DATE	REVISION	BY	APVD

FOR REFERENCE ONLY
PROJECT MANAGER RFP
(NOT FOR CONSTRUCTION)

REGISTERED PROFESSIONAL ENGINEER JOSEPH A. RIESS No. C66413 CIVIL STATE OF CALIFORNIA 3/25/2024

DESIGN: S. NILSEN
DRAWN: J. MARTIN
CHECKED: J. RIESS
APPROVED: J. RIESS

WATERWORKS ENGINEERS
760 CYPRESS AVE SUITE 201, REDDING, CA. 96001

PARADISE IRRIGATION DISTRICT

WASHWATER EQUALIZER TANK REPLACEMENT PROJECT

PARADISE, CA

MECHANICAL

PHASE 1
TANK 2 PLAN

DATE: MARCH 2024
PROJECT NO.: 22-098
DRAWING NO.: 1-M-1
SHEET NO.: 29

FILENAME: L:\CAD\Projects\22-098 PID WTP Equalizer Tank Replacement\07 Drawings\2298D-10M101.dgn

PLOT DATE: 3/25/2024 PLOT TIME: 3:22:32 AM

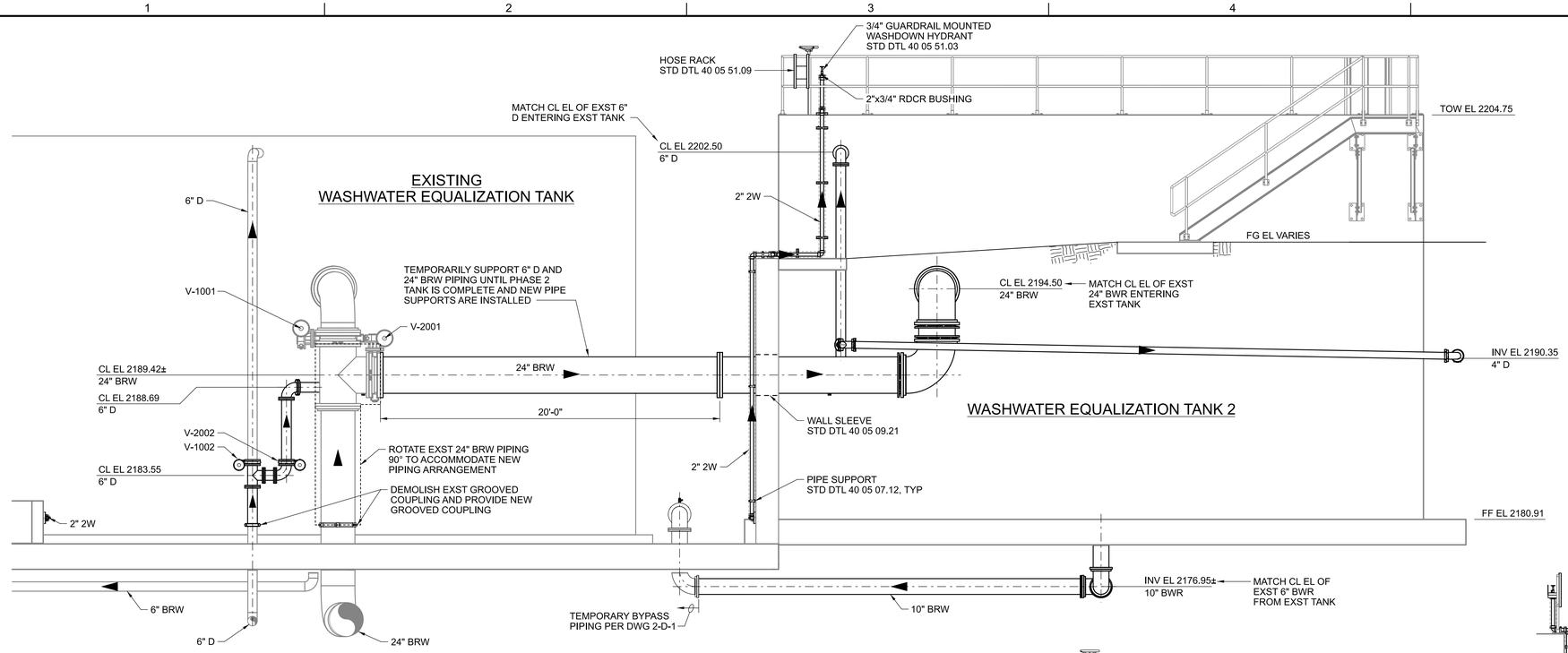

A SECTION
1-M-1 1/4"=1'-0"

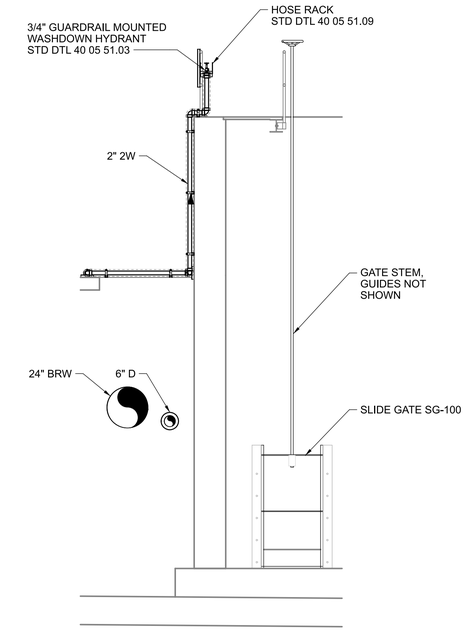

E SECTION
1-M-2 1/4"=1'-0"

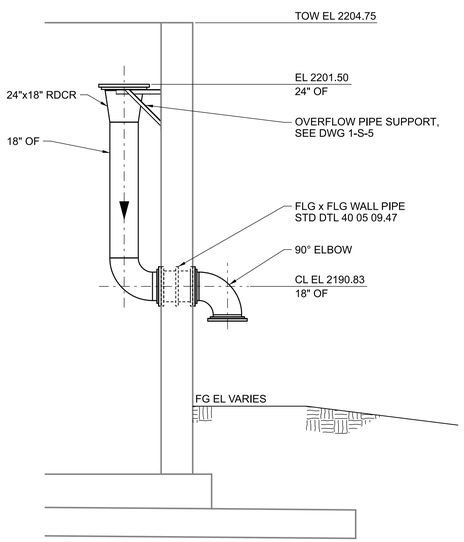

B SECTION
1-M-1 1/4"=1'-0"

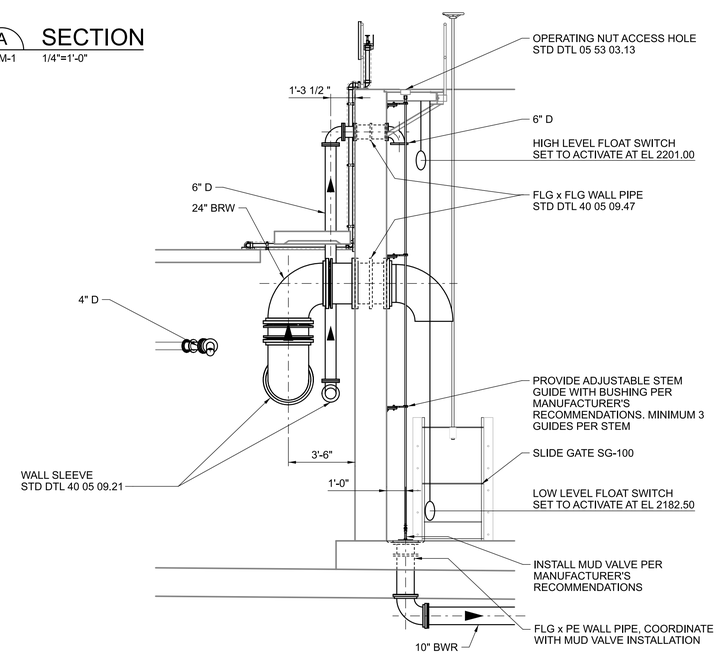

C SECTION
1-M-1 1/4"=1'-0"

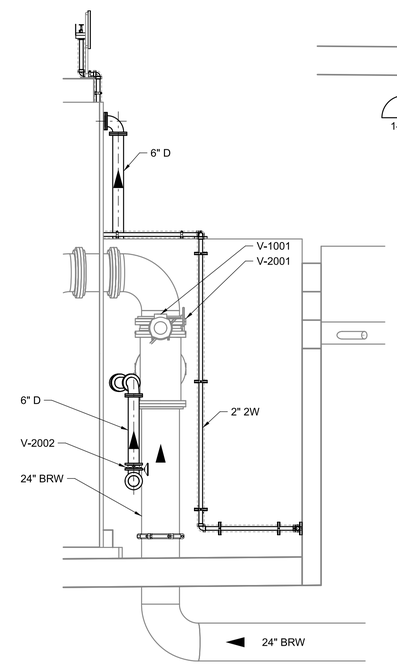

D SECTION
1-M-1 1/4"=1'-0"

4 0 4 8 FEET
SCALE 1/4"=1'-0"

VERIFY SCALE
BAR IS ONE INCH ON ORIGINAL DRAWING
0 1"
IF NOT ONE INCH ON THIS SHEET, ADJUST SCALES ACCORDINGLY

NO	DATE	REVISION	BY	APVD

FOR REFERENCE ONLY
PROJECT MANAGER RFP
(NOT FOR CONSTRUCTION)

REGISTERED PROFESSIONAL ENGINEER JOSEPH A. RIESS No. C66413 CIVIL STATE OF CALIFORNIA 3/25/2024

DESIGN: S. NILSEN
DRAWN: J. MARTIN
CHECKED: J. RIESS
APPROVED: J. RIESS

WATERWORKS ENGINEERS
760 CYPRESS AVE SUITE 201, REDDING, CA. 96001

PARADISE IRRIGATION DISTRICT
WASHWATER EQUALIZER TANK REPLACEMENT PROJECT
PARADISE, CA

MECHANICAL
PHASE 1
TANK SECTIONS

DATE: MARCH 2024
PROJECT NO.: 22-098
DRAWING NO.: 1-M-3
SHEET NO.: 30

FILENAME: L:\CAD\Projects\22-098 PID WTP Equalizer Tank Replacement\07 Drawings\2298D-10M201.dgn
PLOT DATE: 3/25/2024 PLOT TIME: 3:24:21 AM

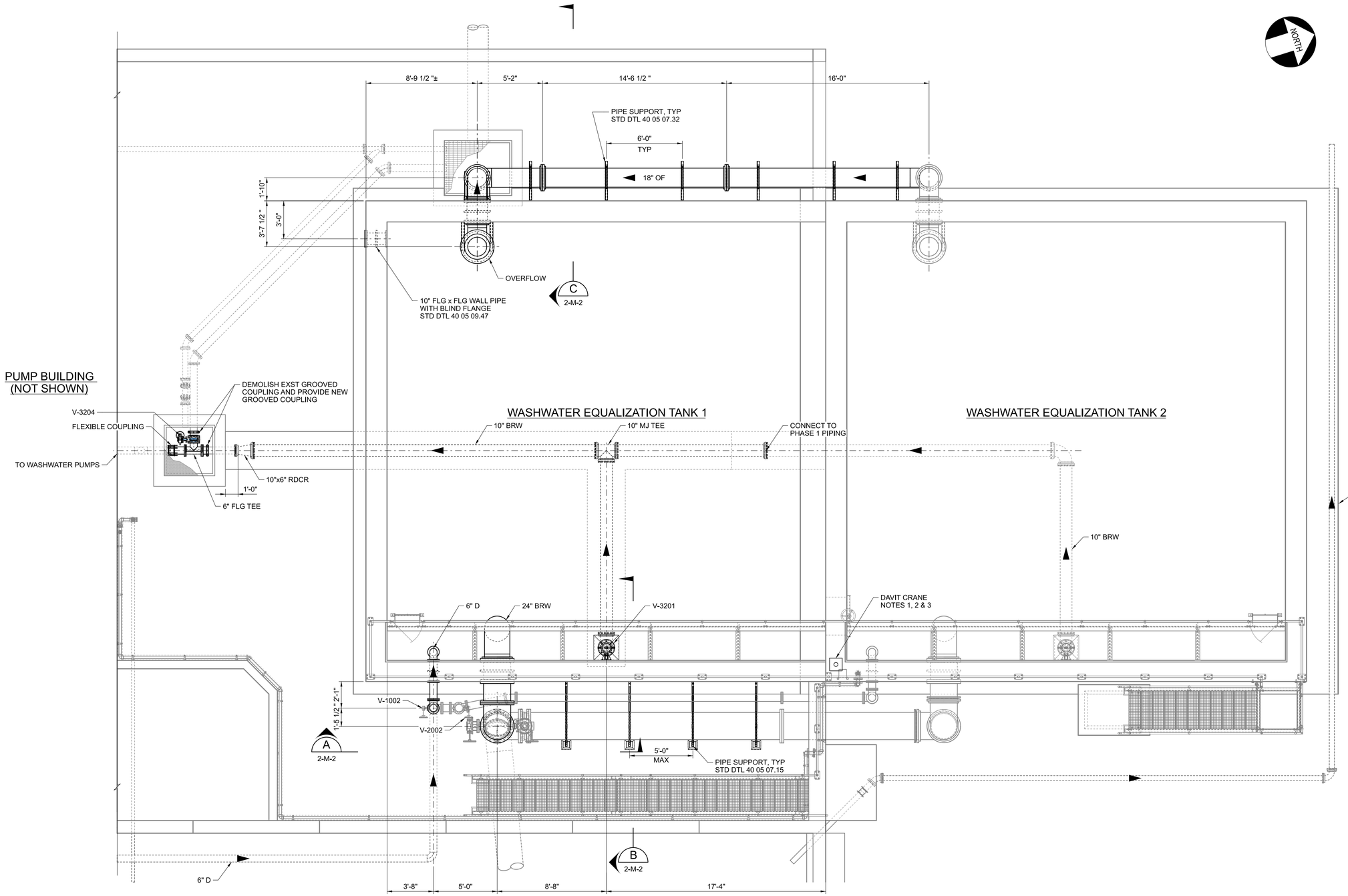

PLAN

1/4"=1'-0"

4 0 4 8 FEET

SCALE 1/4"=1'-0"

GENERAL NOTES

1. PROVIDE 2000 LBS CAPACITY DAVIT CRANE, 5PT20 COMMANDER SERIES BY L.K. GOODWIN CO OR EQUAL. CRANE FINISH SHALL BE RED POWDER COATED. PROVIDE 115/1/60VAC ELECTRIC WINCH WITH 6-FT PENDANT CONTROL, ENAMEL FINISH. PROVIDE 3/16" BY 36' GALVANIZED WIRE ROPE WITH SWIVEL HOOK AND SWAGED BALL FITTING.
2. PROVIDE ONE RED POWDER COATED FLUSH MOUNT FOR DAVIT CRANE.
3. PROVIDE ONE RGC GRAVEL BUCKET MODEL NUMBER GB400 OR EQUAL.
4. USE GROOVED COUPLINGS ON DIP PIPE IN VALVE VAULT.
5. TANK 2 TO REMAIN OPERATIONAL DURING PHASE 2 CONSTRUCTION.

VERIFY SCALE

BAR IS ONE INCH ON ORIGINAL DRAWING

0 1"

IF NOT ONE INCH ON THIS SHEET, ADJUST SCALES ACCORDINGLY

NO	DATE	REVISION	BY	APVD

FOR REFERENCE ONLY
PROJECT MANAGER RFP
(NOT FOR CONSTRUCTION)

REGISTERED PROFESSIONAL ENGINEER
JOSEPH A. VIEIRA
No. C66413
CIVIL
STATE OF CALIFORNIA
3/25/2024

DESIGN: S. NILSEN
DRAWN: J. MARTIN
CHECKED: J. RIESS
APPROVED: J. RIESS

WATERWORKS ENGINEERS
760 CYPRESS AVE SUITE 201, REDDING, CA. 96001

PARADISE IRRIGATION DISTRICT

WASHWATER EQUALIZER TANK REPLACEMENT PROJECT

PARADISE, CA

MECHANICAL

PHASE 2
TANK 1 PLAN

DATE: MARCH 2024
PROJECT NO.: 22-098
DRAWING NO.: 2-M-1
SHEET NO.: 31

FILENAME: L:\CAD\Projects\22-098 PID WTP Equalizer Tank Replacement\07 Drawings\2298D-20M101.dgn

PLOT DATE: 3/25/2024 PLOT TIME: 3:30:44 AM

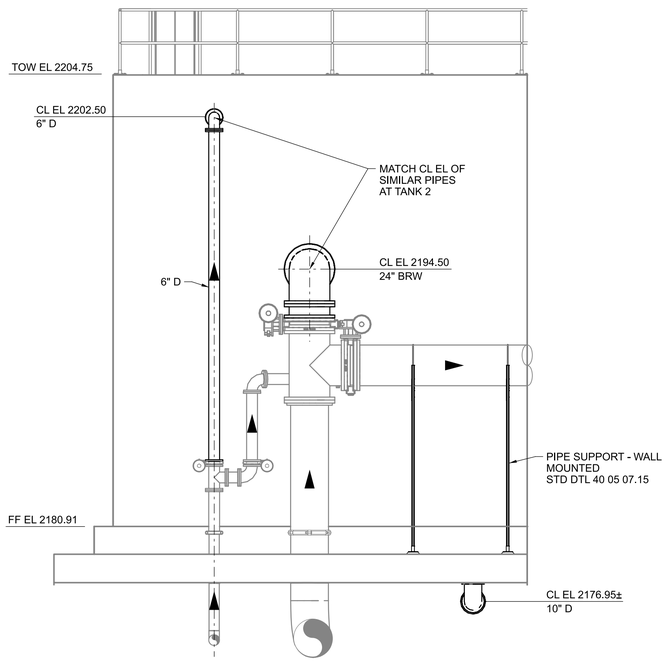

A SECTION
2-M-1 1/4"=1'-0"

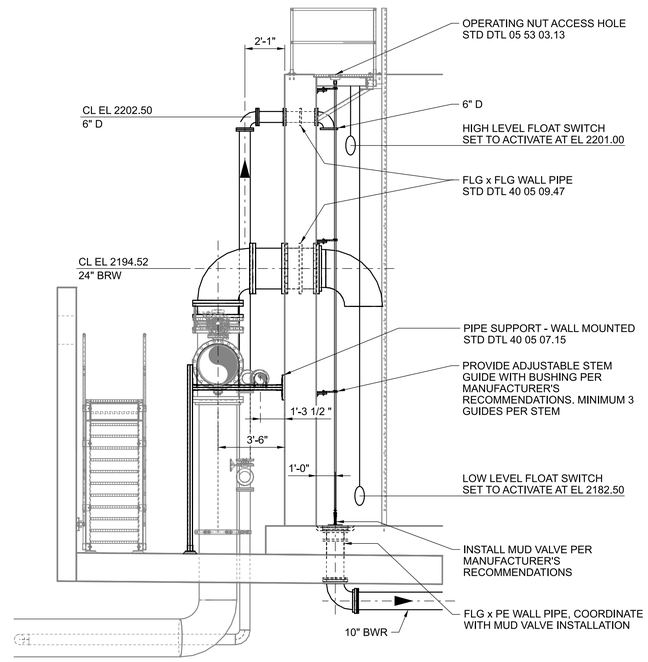

B SECTION
2-M-1 1/4"=1'-0"

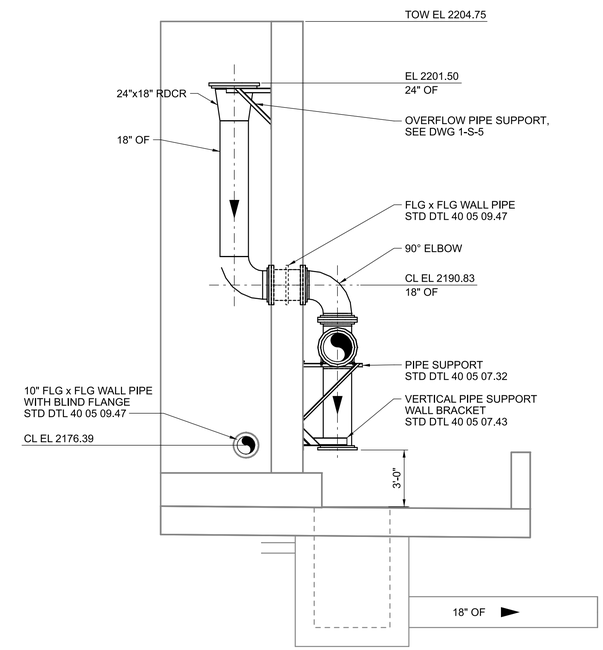

C SECTION
2-M-1 1/4"=1'-0"

4 0 4 8 FEET
SCALE 1/4"=1'-0"

VERIFY SCALE
BAR IS ONE INCH ON ORIGINAL DRAWING
0 1"
IF NOT ONE INCH ON THIS SHEET, ADJUST SCALES ACCORDINGLY

NO	DATE	REVISION	BY	APVD

FOR REFERENCE ONLY
PROJECT MANAGER RFP
(NOT FOR CONSTRUCTION)

REGISTERED PROFESSIONAL ENGINEER JOSEPH A. RIESS No. C66413 CIVIL STATE OF CALIFORNIA
3/25/2024

DESIGN S. NILSEN
DRAWN J. MARTIN
CHECKED J. RIESS
APPROVED J. RIESS

WATERWORKS ENGINEERS
760 CYPRESS AVE SUITE 201, REDDING, CA. 96001

PARADISE IRRIGATION DISTRICT
WASHWATER EQUALIZER TANK REPLACEMENT PROJECT
PARADISE, CA

MECHANICAL
PHASE 2
TANK 1 SECTIONS

DATE MARCH 2024
PROJECT NO. 22-098
DRAWING NO. 2-M-2
SHEET NO. 32

FILENAME: L:\CAD\Projects\22-098 PID WTP Equalizer Tank Replacement\07 Drawings\2298D-20M201.dgn
PLOT DATE: 3/25/2024 PLOT TIME: 3:32:48 AM

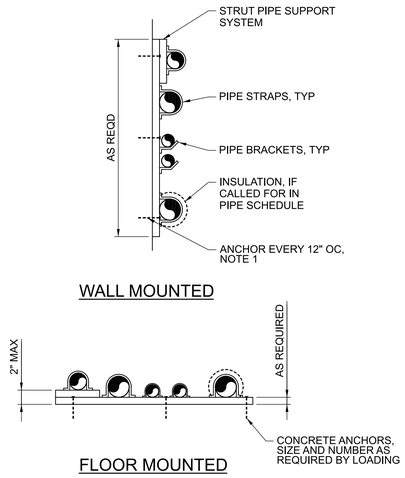

NOTES:

1. ATTACH TO WALL WITH SST ANCHORS, 3/8" DIAMETER MIN, COORDINATED WITH WALL CONSTRUCTION.
2. USE NEOPRENE SLEEVE ON COPPER AND PVC PIPING AT STRAPS AND BRACKET.

PIPE SUPPORT - WALL AND FLOOR MOUNTED

NTS

40 05 07.12

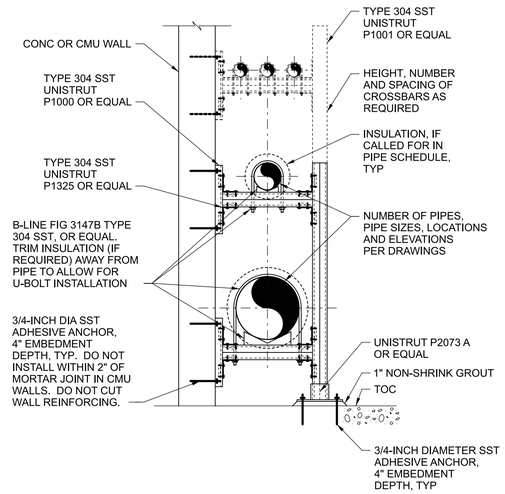

PIPE SUPPORT - WALL MOUNTED

NTS

40 05 07.15

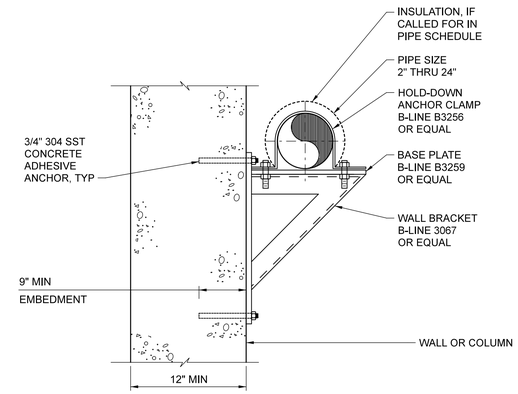

NOTES:

1. ALL PIPE SUPPORT MATERIALS TO BE 304 SST.

FIXED PIPE SUPPORT- WALL BRACKET 2 IN- 18 IN

NTS

40 05 07.32

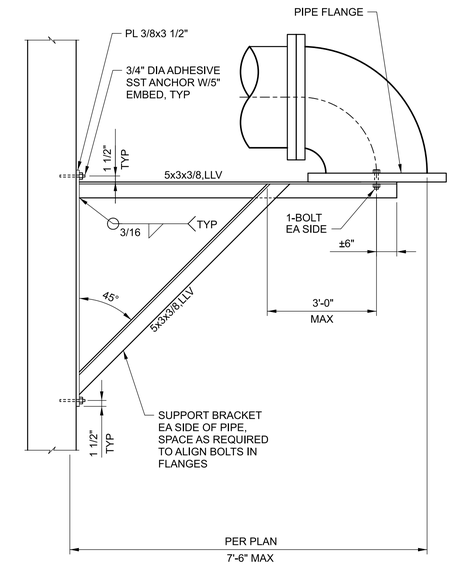

VERTICAL PIPE SUPPORT WALL BRACKET

NTS

40 05 07.43

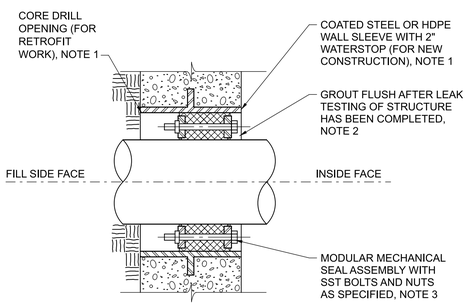

NOTES:

1. COORDINATE SIZE OF WALL SLEEVE (NEW CONSTRUCTION) OR CORE DRILL (RETROFIT WORK) WITH MODULAR MECHANICAL SEAL MANUFACTURER TO CREATE A LEAK PROOF ASSEMBLY TO 20 PSI.
2. AFTER MODULAR SEAL IS INSTALLED AND LEAK TESTED, BUT BEFORE GROUT IS PLACED, GREASE INSIDE FACE OF SEAL.
3. INSTALL PER MANUFACTURES INSTRUCTIONS.

WALL SLEEVE WITH MODULAR MECHANICAL SEAL

NTS

40 05 09.21

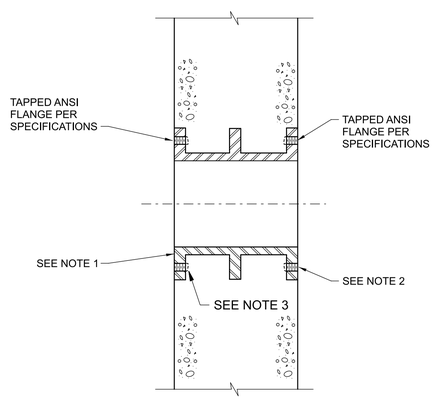

NOTES:

1. COAT WALL PIPE WITH PAINT PER SPEC SECTION 09 91 03 SYSTEM 300 PRIOR TO CONCRETE PLACEMENT.
2. PROTECT THREADS FROM CONCRETE INTRUSION DURING PLACEMENT, TYP.
3. MAKE ALLOWANCE FOR BOLT ENDS TO PROTRUDE, TYP.

DUCTILE IRON WALL PIPE - FLG X FLG WALL PIPE

NTS

40 05 09.47

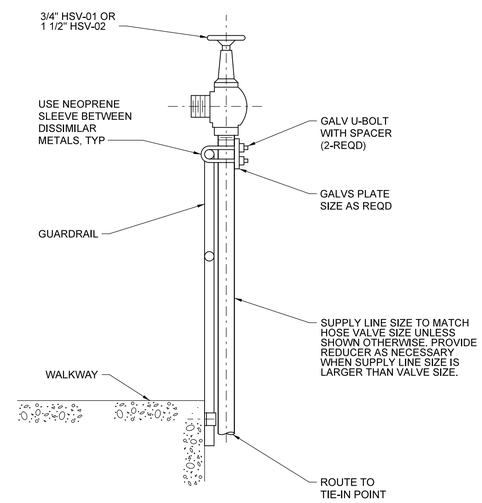

NOTE:

1. WHERE HOSE VALVE IS SUPPLIED WITH NON-POTABLE WATER, INSTALL NON-POTABLE WATER WARNING SIGN IN A CONSPICUOUS PLACE NEXT TO EACH HOSE VALVE. SEE SPECIFICATIONS FOR SIGN REQUIREMENTS.

GUARDRAIL MOUNTED WASHDOWN HYDRANT

NTS

40 05 51.03

VERIFY SCALE

BAR IS ONE INCH ON ORIGINAL DRAWING

0 1"

IF NOT ONE INCH ON THIS SHEET, ADJUST SCALES ACCORDINGLY

FOR REFERENCE ONLY
PROJECT MANAGER RFP
(NOT FOR CONSTRUCTION)

NO	DATE	REVISION	BY	APVD

REGISTERED PROFESSIONAL ENGINEER JOSEPH A. RIESS No. C66413 CIVIL STATE OF CALIFORNIA 3/25/2024

DESIGN S. NILSEN
DRAWN J. MARTIN
CHECKED J. RIESS
APPROVED J. RIESS

WATERWORKS ENGINEERS
760 CYPRESS AVE SUITE 201, REDDING, CA. 96001

PARADISE IRRIGATION DISTRICT

WASHWATER EQUALIZER TANK REPLACEMENT PROJECT

PARADISE, CA

MECHANICAL

STANDARD DETAILS

DATE MARCH 2024
PROJECT NO. 22-098
DRAWING NO. MSD-1
SHEET NO. 33

FILENAME: L:\CAD\Projects\22-098 PID WTP Equalizer Tank Replacement\07 Drawings\2298D-MSD001.dgn

PLOT DATE: 3/25/2024 PLOT TIME: 3:40:56 AM

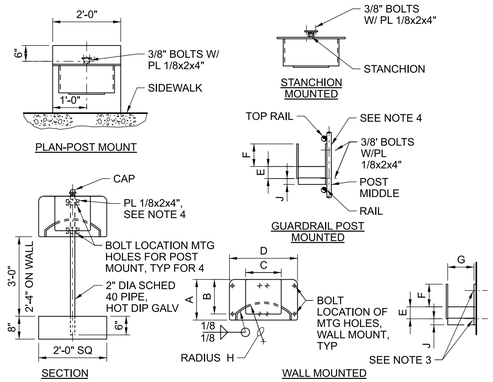

RACK TYPE	DIMENSION IN INCHES								
	A	B	C	D	E	F	G	H	J
TYPE A-3/4" & 1" HOSE	9	7-1/2	6	9	3	4	7-1/2	9-3/4	2
TYPE B-1 1/2" HOSE	12	10	9	12	4	6	10	13	2

NOTES:

1. INTERIOR UNITS SHALL BE FABRICATED FROM 1/8" A-36 STEEL PLATE AND ENTIRE UNIT SHALL BE HOT DIP GALVANIZED AFTER FABRICATION.
2. EXTERIOR UNITS SHALL BE FABRICATED FROM 3/16" 6061-T6 ALUMINUM ALLOY PLATE.
3. ATTACH TO WALL WITH SST ANCHORS, 3/8" DIAMETER MIN, COORDINATE WITH WALL CONSTRUCTION
4. ATTACH TO VERTICAL GUARDRAIL OR INDIVIDUAL POST WITH PLATES AND (4) - 3/8" STAINLESS STEEL BOLTS.
5. ATTACH TO STEEL COLUMN WITH (4) - 3/8" ROUND HEAD BOLTS, ONE EACH CORNER. INSERT DOUBLE SPACER NUTS BETWEEN COLUMN AND HOSE RACK.

HOSE RACK

NTS

40 05 51.09

VERIFY SCALE

BAR IS ONE INCH ON ORIGINAL DRAWING

0 1"

IF NOT ONE INCH ON THIS SHEET, ADJUST SCALES ACCORDINGLY

NO	DATE	REVISION	BY	APVD

FOR REFERENCE ONLY
PROJECT MANAGER RFP
(NOT FOR CONSTRUCTION)

REGISTERED PROFESSIONAL ENGINEER JOSEPH A. RIESS No. C66413 CIVIL STATE OF CALIFORNIA 3/25/2024

DESIGN S. NILSEN
DRAWN J. MARTIN
CHECKED J. RIESS
APPROVED J. RIESS

WATERWORKS ENGINEERS
760 CYPRESS AVE SUITE 201, REDDING, CA. 96001

PARADISE IRRIGATION DISTRICT

WASHWATER EQUALIZER TANK REPLACEMENT PROJECT

PARADISE, CA

MECHANICAL

STANDARD DETAILS

DATE MARCH 2024
PROJECT NO. 22-098
DRAWING NO. MSD-2
SHEET NO. X

FILENAME: L:\CAD\Projects\22-098 PID WTP Equalizer Tank Replacement\07 Drawings\2298D-MSD001.dgn

PLOT DATE: 3/25/2024 PLOT TIME: 3:41:16 AM

SINGLE LINE DIAGRAM SYMBOLS & CONTROL DIAGRAM SYMBOLS

PUSH BUTTONS

NORMALLY OPEN (NO)	NORMALLY CLOSED (NC)	DESCRIPTION:
PB##	PB##	EMERGENCY STOP PUSH BUTTON WITH RED MUSHROOM HEAD OPERATOR (MAINTAINED CONTACT)
PB##	PB##	PUSH BUTTON, MOMENTARY CONTACT, SPRING RETURN
SSPB##		START/STOP PUSH BUTTON CONTROL STATION, MAINTAINED CONTACT WITH LOCKOUT DEVICE ON STOP

PILOT LIGHTS

CLR — FCN

PUSH TO TEST, 110V S6 LAMP UNLESS NOTED. LETTER IS LENS COLOR:
- R = RED
- A = AMBER
- B = BLUE
- C = CLEAR
- G = GREEN
- Y = YELLOW
- W = WHITE

SELECTOR SWITCHES

PB## A B OX; PB## A B OX	TWO (2) POSITION SELECTOR SWITCH
SS## A B OX; XO	TWO (2) POSITION, TWO (2) POLE SELECTOR SWITCH
SS## A B OX; XO; XO	TWO (2) POSITION, THREE (3) POLE SELECTOR SWITCH
SS## A B C XOO; SS## A B C OOX	THREE (3) POSITION SELECTOR SWITCH
SS## A B C XOO; OXO; OOX	THREE (3) POSITION, THREE (3) POLE SELECTOR SWITCH
SS## A B C D OXOO; SS## A B C D XOOO	FOUR (4) POSITION SELECTOR SWITCH

SELECTOR SWITCHES

NORMALLY OPEN (NO)	NORMALLY CLOSED (NC)	DESCRIPTION:
SS## A B C D XOOO; OXOO; OOXO; OOOX		FOUR (4) POSITION, FOUR (4) POLE SELECTOR SWITCH

RELAYS

CR## ??? CR## ???	RELAY CONTACT: NORMALLY OPEN (NO) NORMALLY CLOSED (NC)
CR## CR ### ???	CONTROL RELAY COIL NUMBER AS INDICATED
LR##A L NO NC ???	LATCH RELAY COIL
LR##B U NO NC ???	UNLATCH RELAY COIL

LIMIT SWITCHES

FCN LS## ; LS## FCN	POSITION (LIMIT) SWITCH
LS## ??? ; LS## ???	POSITION (LIMIT) SWITCH NO: HELD CLOSED NC: HELD OPEN
TS## ??? ; TS## ???	TORQUE SWITCH NO: CLOSES ON HIGH TORQUE NC: OPENS ON HIGH TORQUE

PRESSURE & TEMPERATURE SWITCHES

PS## ??? ; PS## ???	PRESSURE SWITCH NO: CLOSES ON RISING PRESSURE NC: OPENS ON DROPPING PRESSURE
PSV## V ??? ; PSV## V ???	VACUUM SWITCH NO: CLOSES ON RISING PRESSURE NC: OPENS ON DROPPING PRESSURE
DPS## ??? ; DPS## ???	DIFFERENTIAL PRESSURE SWITCH NO: CLOSES ON RISING DIFFERENTIAL PRESSURE NC: OPENS ON DROPPING DIFFERENTIAL PRESSURE
TS## ??? ; TS## ???	TEMPERATURE SWITCH NO: CLOSES ON RISING TEMPERATURE NC: OPENS ON RISING TEMPERATURE

PRESSURE & TEMPERATURE SWITCHES

FLT## ??? ; FLT## ???	LIQUID LEVEL (FLOAT) NO: CLOSES ON RISING LEVEL NC: OPENS ON RISING LEVEL
FS## ??? ; FS## ???	FLOW SWITCH (AIR, WATER, ETC.) NO: CLOSES ON INCREASED FLOW NC: OPENS ON INCREASED FLOW

MISCELLANEOUS SWITCHES

NORMALLY OPEN (NO)	NORMALLY CLOSED (NC)	DESCRIPTION:
AUX## XO ???	AUX## XO ???	AUXILIARY SWITCH CONTACT
TGS### ???	TGS## ???	TOGGLE SWITCH
FTS## FCN	FTS## FCN	FOOT SWITCH
PRS### FCN	PRS### FCN	PROXY SWITCH
PCS## FCN	PCS## FCN	PULL CORD
APL## FCN	APL## FCN	A-PLUG
PE## FCN	PE## FCN	PHOTO EYE
SPDT##A		SINGLE POLE DOUBLE THROW (SPDT) MAINTAIN
SPDT##B		SINGLE POLE DOUBLE THROW (SPDT) RETURN FROM DOWN
SPDT##C		SINGLE POLE DOUBLE THROW (SPDT) RETURN FROM UP
SPDT##D		SINGLE POLE DOUBLE THROW (SPDT) RETURN FROM BOTH

TIMERS

TD## CR ### NO NC ?? DELAY	ON DELAY COIL
TD##A NO NC ON DELAY	ON DELAY MOTOR
TD##A NO NC OFF DELAY	OFF DELAY MOTOR
TD## FCN ; TD## FCN	ON DELAY NOTC: NORMALLY OPEN TIMED CLOSING, WHEN ENERGIZED NCTO: NORMALLY CLOSED TIMED OPENING, WHEN ENERGIZED
TD## FCN ; TD## FCN	OFF DELAY NOTO: NORMALLY OPEN, TIMED OPENING WHEN DEENERGIZED NCTC: NORMALLY CLOSED, TIMED CLOSING WHEN DEENERGIZED

TERMINALS & CONNECTORS

SINGLE LINE / CONTROL DIAGRAM	DESCRIPTION:
? ?	DOT
# ?	SQUARE
# ?	ROUND
# X ?	HEXAGON
# ?	DIAMOND
# ?	TRIANGLE
PDB## L1 L2 L3	POWER DISTRIBUTION BOX
PJ##	PLUG / JACK
PJ##	JACK / PLUG
PJ##	PLUG RIGHT OR UP
PJ##	JACK LEFT OR DOWN
	IN LEFT TOP
	IN BOTH TOP
	OUT RIGHT TOP
	OUT BOTH TOP

MISCELLANEOUS DEVICES

FCN	BELL
FCN	BUZZER
FCN	HORN
V FCN	VOLT METER
A FCN	AMP METER
- + V OR + - V	BATTERY
FR## Ω OR FR## Ω	FIXED RESISTOR
Ω OR Ω	VARIABLE RESISTOR
D## OR D##	DIODE
ZD## OR ZD##	ZENER DIODE
???	CAPACITOR

MISCELLANEOUS DEVICES

SINGLE LINE / CONTROL DIAGRAM	DESCRIPTION:
SPD ???	SUPPRESSOR
	GROUND
RCPT## ??? OR RCPT## ???	RECEPTACLES
LT##	ENCLOSURE LIGHT
	GROUND CHASSIS

CONDUITS & CONDUCTORS

	CONDUCTORS NOT CONNECTED
	CONDUCTORS CONNECTED
	CONDUCTOR SHIELD
	CONDUCTOR SHIELD TWISTED PAIR
	FIELD CONDUCTOR SHIELD
	FIELD CONDUCTOR SHIELD TWISTED PAIR
	EARTH GROUND
	CHASSIS GROUND
	NEUTRAL
	SEPARABLE CONNECTOR SIFICATION SHOWN.

CONDUITS & CONDUCTORS

M## CR ### ??? NO ? NC ?	MOTOR STARTER COIL
### HP GEN###	MOTOR
OL	OVERLOAD
MTR### ##Ω Ω	RESISTOR OR RESISTIVE ELEMENT
HTR### ???	STRIP HEATER OR HEATING ELEMENT
*	HIGH VOLTAGE, GROUP OPERATED, AIR BREAK SWITCH * CONTINUOUS AMPERE RATING
MCR## ??? ; MCR## ???	MOTOR CONTACT: NORMALLY OPEN (NO) NORMALLY CLOSED (NC)
CAP##A ???	KVAR CAP
CAP##C ???	THREE PHASE KVAR

DISCRETE I/O

SINGLE LINE / CONTROL DIAGRAM	DESCRIPTION:
DI## DI FCN	DISCRETE INPUT
DO## DO FCN	DISCRETE OUTPUT

ANALOG I/O

AI## AI FCN	ANALOG INPUT
AO## AO FCN	ANALOG OUTPUT

VERIFY SCALE

BAR IS ONE INCH ON ORIGINAL DRAWING

0 — 1"

IF NOT ONE INCH ON THIS SHEET, ADJUST SCALES ACCORDINGLY

NO	DATE	REVISION	BY	APVD

FOR REFERENCE ONLY
PROJECT MANAGER RFP
(NOT FOR CONSTRUCTION)

REGISTERED PROFESSIONAL ENGINEER — JOSEPH A. RIESS — No. C66413 — CIVIL — STATE OF CALIFORNIA — 3/25/2024

DESIGN	J. BOYLES
DRAWN	J. ISIDORO
CHECKED	B. YOUNG
APPROVED	J. RIESS

WATERWORKS ENGINEERS
760 CYPRESS AVE SUITE 201, REDDING, CA. 96001

PARADISE IRRIGATION DISTRICT

WASHWATER EQUALIZER TANK REPLACEMENT PROJECT

PARADISE, CA

ELECTRICAL

LEGEND NO. 1

DATE	MARCH 2024
PROJECT NO.	22-098
DRAWING NO.	E-1
SHEET NO.	35

FILENAME: L:\CAD\Projects\22-098 PID WTP Equalizer Tank Replacement\07 Drawings\2298D-E001.dgn

PLOT DATE: 3/24/2024 PLOT TIME: 12:46:14 AM

SINGLE LINE DIAGRAM SYMBOLS, CONTROL DIAGRAM SYMBOLS, & PLAN VIEW SYMBOLS

FUSES & CIRCUIT BREAKERS

SINGLE LINE OR CONTROL DIAGRAM	PLAN VIEW	DESCRIPTION:
##A ??? ##P CB###		THERMAL MAGNETIC CIRCUIT BREAKER TRIP RATING ABOVE; FRAME RATING BELOW. TYPICAL FOR OTHER TYPES OF BREAKERS. BREAKER TO BE 3 POLE UNLESS NOTED OTHERWISE AS 1P OR 2P
###AT ###AF ### CB### ???	N/A	DRAWOUT MEDIUM VOLTAGE POWER BREAKER UPPER NUMBER INDICATES LONG TIME TRIP SETTING LOWER NUMBER INDICATES BREAKER CONTINUOUS CURRENT RATING
##A ???-### ##P ??? Z		COMBINATION MOTOR STARTER WITH MOTOR CIRCUIT PROTECTOR, MAGNETIC CONTACTOR AND OVERLOAD PROTECTION X= AMPERE SIZE Z= NEMA SIZE
Z		MOTOR STARTER WITH MAGNETIC CONTACTOR AND OVERLOAD PROTECTION Z= NEMA SIZE
FU## ##A	N/A	FUSE
FU## ##A	N/A	FUSED SWITCH

POWER RECEPTACLES

PLAN VIEW	DESCRIPTION:
#### #### ####	208V, 3P, 4W, RECEPTACLE ##A = AMPERE RATING AS NOTED LP-##= PANEL BOARD NUMBER Y= CIRCUIT NUMBER
#### #### ####	240V, 20, 3W, RECEPTACLE ##A = AMPERE RATING AS NOTED LP-##= PANEL BOARD NUMBER Y= CIRCUIT NUMBER
#### #### ####	FLOOR OUTLET BOX WITH TYPE OUTLET INDICATED
#### #### ####	480V, 3P, 4W RECEPTACLE AND DISCONNECT SWITCH ##A = AMPERE RATING AS NOTED X = PANEL BOARD NUMBER Y = CIRCUIT NUMBER
#### #### #### ####	DUPLEX RECEPTACLE, 20A, 120V, 2P, 3W UNLESS OTHERWISE NOTED * =C - MOUNTED ABOVE COUNTERTOP GF - GROUND FAULT INTERRUPTER TYPE WP - WEATHERPROOF T - TRANSIENT VOLTAGE SURGE SUPPRESSER X= PANEL BOARD NUMBER Y= CIRCUIT NUMBER
#### #### ####	QUAD RECEPTACLE, 20A, 120V, 2P, 3W UNLESS OTHERWISE NOTED NOTATION SAME AS ABOVE

PUSH POWER EQUIPMENT & DEVICES

SINGLE LINE OR CONTROL DIAGRAM	PLAN VIEW	DESCRIPTION:
#### #### ####	####	LOCAL CONTROL PANEL
#### #### ####	#### OR	POWER DISTRIBUTION PANEL BOARD NO. # (480V OR 480/277V) ### = PANEL NAME
#### #### PP-#### ####		
### #### ####	####	NON-FUSIBLE DISCONNECT SWITCH, 600 VOLT, 3 POLE, (##A) AMPERE RATING
#### #### ####	F ####	FUSIBLE DISCONNECT SWITCH, 600 VOLT, 3 POLE, AMPERE RATING AND FUSE SIZE AS NOTED (##A) AMPERE RATING (FU#) FUSE RATING
#### #### ####	#### #### ####	MANUAL MOTOR STARTER WITH THERMAL OVERLOAD PROTECTION "CLR" INDICATES WITH PILOT LIGHT "#P" INDICATES NUMBER OF POLES
	N/A	DRAWOUT TYPE EQUIPMENT OR DEVICE
	N/A	MEDIUM VOLTAGE CABLE TERMINATION
#### ####	N/A	MEDIUM VOLTAGE AIR INTERRUPTER SWITCH
### ###	N/A	MEDIUM VOLTAGE FUSED MOTOR CONTROLLER #AT = AUTOTRANSFORMER TYPE
#### M #### ####	N/A	METER (M##) PQM - POWER QUALITY METER
### HP GEN###	G	GENERATOR WITH GENERATION NUMBER, RATINGS AND CONNECTIONS AS NOTED IN CALL OUT ON DRAWING
### HP #### ####	MTR	MOTOR, NUMERAL INDICATES HORSEPOWER ASD - ADJUSTABLE SPEED DRIVE VFD - VARIABLE FREQUENCY DRIVE SER - DC SPEED CONTROLLER FVNR - FULL-VOLTAGE NON-REVERSING STARTER
S O O N #### ####	####	AUTOMATIC TRANSFER SWITCH (ATS) "N" INDICATES NORMAL SOURCE "S" INDICATES STANDBY SOURCE #RATE = INDICATES CONTINUOUS CURRENT RATING # = INDICATES ATS NAME
####	####	RVSS - REDUCED VOLTAGE SOFT STARTER FVR - FULL-VOLTAGE REVERSING STARTER 2S - TWO-SPEED STARTER AT - AUTOTRANSFORMER STARTER SMC - SYNCHRONOUS MOTOR CONTROLLER
####	N/A	OVERLOAD DEVICE
#### #### #### ####	N/A	VOLTMETER WITH SWITCH, 3 PHASE (*) = SCALE

PUSH POWER EQUIPMENT & DEVICES (CONT.)

SINGLE LINE OR CONTROL DIAGRAM	PLAN VIEW	DESCRIPTION:
#### #### #### ####	N/A	AMMETER WITH SWITCH, 3 PHASE (*) = SCALE
#### ####	N/A	LIGHTNING ARRESTOR
#### ####	N/A	SURGE PROTECTOR
####	####	TRANSIENT VOLTAGE SURGE SUPPRESSOR (POWER DISTRIBUTION TYPE)
#### #### ####	N/A	PUSH TO TEST LETTER IS LENS COLOR: R = RED G = GREEN C = CLEAR A = AMBER Y = YELLOW B = BLUE W = WHITE
#### ####	SOV	SOLENOID OPERATED VALVE
ETM	N/A	ELAPSED TIME METER
#### ####	####	UNIT HEATER
#### ####	####	WATER HEATER
DM-#### ####	DM-####	DAMPER MOTOR
LCP MOV ####	MOV	MOTOR OPERATED VALVE "XXXX" DENOTES LOOP NUMBER TO BE OBTAINED FROM INSTRUMENTATION DRAWINGS
		CONTROL STATION
ITP #### ####	####	INTERMEDIATE TERMINAL PANEL
K	N/A	KEY INTERLOCK
K E	N/A	ELECTRONIC KEY INTERLOCK
		CORD AND PLUG CONNECTION
N/A	T	THERMOSTAT
N/A	OC	OCCUPANCY SENSOR
N/A	PC	PHOTOCELL
N/A	ESA	EMERGENCY SHOWER ALARM STATION
OR	N/A	JUMPER

PUSH POWER EQUIPMENT & DEVICES (CONT.)

SINGLE LINE OR CONTROL DIAGRAM	PLAN VIEW	DESCRIPTION:
MS	$####	MOTOR SWITCH
N/A	J	JUNCTION BOX
N/A	PB OR PB	PULL BOX
#### ####		FIELD MOUNTED INSTRUMENT: XXX= DESIGNATION TO BE OBTAINED FROM INSTRUMENTATION DRAWINGS

FUSES & CIRCUIT BREAKERS

SINGLE LINE / CONTROL DIAGRAM	DESCRIPTION:
XFMR### ##kVA ###A / ###A ##Ø	TRANSFORMER, RATINGS AND CONNECTIONS AS NOTED. UNLESS OTHERWISE NOTED ON THE ONE LINE DIAGRAMS ALL DRY TYPE TRANSFORMERS SERVICING ADMINISTRATIVE AND LABORATORY SPACES SHALL HAVE A K FACTOR OF 13. ALL OTHER DRY TYPE TRANSFORMERS SHALL HAVE A K-4 RATING. ISOLATION TRANSFORMERS SHALL HAVE A K-20 RATING
XFMR### ##kVA ###A / ###A ##Ø	
XFMR### ##kVA ###A / ###A ##Ø	DUAL TRANSFORMER
###A / ###A XF### (*) ??? N/A	CURRENT TRANSFORMER *QUANTITY XXXX = PRIMARY AMPERE RATING
###A/###A ??? XF### (*) N/A	POTENTIAL TRANSFORMER (PT) OR CONTROL POWER TRANSFORMER (CPT) (*) QUANTITY XXXX = PRIMARY VOLTAGE RATING
###A / ###A XF### (*) ??? N/A	GROUND FAULT CURRENT TRANSFORMER (GFCT) (*) QUANTITY XXXX = PRIMARY VOLTAGE RATING

GROUNDING

PLAN VIEW	DESCRIPTION:
	GROUND ROD
	GROUND ROD IN GROUNDING WELL
	GROUND ROD IN TEST WELL
	GROUND GRID CABLE CONNECTION, WELDED

SWITCHES

$####	SINGLE POLE SWITCH "a" INDICATES SWITCH LEG SHALL CONTROL LUMINARIES WITH "a" DESIGNATION
$####	DOUBLE POLE SWITCH "b" INDICATES SWITCH LEG SHALL CONTROL LUMINARIES WITH "b" DESIGNATION
$####	THREE WAY SWITCH "c" INDICATES SWITCH LEG SHALL CONTROL LUMINARIES WITH "c" DESIGNATION
$####	FOUR WAY SWITCH "d" INDICATES SWITCH LEG SHALL CONTROL LUMINARIES "d" DESIGNATION
$####	SINGLE POLE, DOUBLE THROW MOMENTARY CONTACT SWITCH, CENTER OFF
$####	SINGLE POLE SWITCH AND PILOT LIGHT

LIGHTING FIXTURES & EQUIPMENT

PLAN VIEW	DESCRIPTION:
####	LIGHTING CONTACTOR WITH NUMBER OF POLES AS INDICATED a-CONTACTOR NUMBER (C1, C2, ETC.)
####	TIME SWITCH
#### #### #### #### LP-####	LIGHTING PANEL BOARD NO. # (240/120V OR 208/120V) ### = PANEL NAME
#### OR ALCP-####	AREA LIGHTING CONTACTOR PANEL ### = PANEL NAME
#### #### #### ####	TYPICAL LUMINARIES SEE SCHEDULE FOR SPECIFICS "XX"-FIXTURE TYPE X= PANEL BOARD NAME "b"-CONTROLLED BY SWITCH "b" Y= CIRCUIT NUMBER NL= NIGHT LIGHT (UN-SWITCHED)
#### #### #### ####	WALL MOUNTED LUMINARIE.REFER TO SCHEDULE FOR SPECIFICS. (NOTATIONS SAME AS ABOVE)
#### #### #### ####	DIRECTIONAL FLOOD LIGHT TYPE LUMINARIES. SEE SCHEDULE FOR SPECIFICS. (NOTATIONS SAME AS ABOVE)
#### #### #### ####	LUMINARIES. SEE SCHEDULE FOR SPECIFICS. (NOTATIONS SAME AS ABOVE)
#### #### #### ####	LUMINARIES. SEE SCHEDULE FOR SPECIFICS. (NOTATIONS SAME AS ABOVE)
####	INDICATES ALL LUMINARIES WITHIN THE ROOM OR AREA IN WHICH THIS NOTATION APPEARS SHALL BE TYPE "A" UNLESS OTHERWISE NOTED. SEE LIGHTING FIXTURE SCHEDULE FOR TYPES
####	ALARM BEACON. COLOR AS NOTED. REFER TO SPECIFICATIONS FOR REQUIREMENTS.
#### #### ####	EMERGENCY LUMINARIES WITH BATTERY PACK "E1" FIXTURE TYPE. REFER TO SCHEDULE FOR SPECIFICS. X= PANEL BOARD NAME Y= CIRCUIT NUMBER
#### REM #### ####	REMOTE EMERGENCY LUMINARIES "E2"-FIXTURE TYPE. REFER TO SCHEDULE FOR SPECIFICS
#### #### #### ####	CEILING MOUNTED EXIT SIGN "X1" LUMINAIRE TYPE. REFER TO SCHEDULE FOR SPECIFICS LP-##= PANEL BOARD NAME Y= CIRCUIT NUMBER SP= SELF POWERED
#### #### #### ####	WALL OUTLET EXIT SIGN. ARROW INDICATES DIRECTION OF EXCESS "X2" LUMINAIRE TYPE. REFER TO SCHEDULE FOR SPECIFICS. LP-## = PANEL BOARD NAME Y= CIRCUIT NUMBER SP= SELF POWERED

FIRE ALARM / LIFE SAFETY

PLAN VIEW	DESCRIPTION:
#### ####	FIRE ALARM HEAT DETECTOR 135Y FIXED TEMPERATURE UNLESS OTHER- WISE NOTED. "200" DENOTES 200YF TYPE "R" DENOTES FIXED TEMPERATURE RATE-OF-RISE TYPE.
DSD ####	FIRE ALARM DUCT SMOKE DETECTOR PHOTOCELL TYPE UNLESS OTHERWISE NOTED. "I" DENOTES IONIZATION TYPE.
DSD ####	FIRE ALARM DUCT SMOKE DETECTOR
####	FIRE ALARM CONTROL PANEL
####	FIRE ALARM VENTILATION PANEL (WITH GRAPHIC PANEL)
####	FIRE ALARM REMOTE ANNUNCIATOR
M ####	FIRE ALARM MANUAL PULL STATION, MOUNT UP 4'-0" WP DENOTES WEATHERPROOF COVER
F	OUTDOOR WEATHERPROOF FIRE ALARM MASTER BOX
F	WP FIRE ALARM SPEAKER, MOUNT UP 7'-8"
S	FIRE ALARM STROBE, WALL MOUNT UP 6'-8" OR AT CEILING
F	FIRE ALARM HORN AND STROBE LIGHT COMBINATION, MOUNT UP 6'-8"
F	FIRE ALARM HORN AND STROBE LIGHT COMBINATION, CEILING MOUNT
	SPRINKLER VALVE SUPERVISORY SWITCH
F	FIRE ALARM BELL
STB ####	WEATHERPROOF HIGH DENSITY FIRE ALARM STROBE LIGHT
	SPRINKLER FLOW ALARM SWITCH
CM	ADDRESSABLE CONTROL MODULE
MM	ADDRESSABLE MONITOR MODULE
SD	SMOKE DETECTOR

VERIFY SCALE

BAR IS ONE INCH ON ORIGINAL DRAWING

0 1"

IF NOT ONE INCH ON THIS SHEET, ADJUST SCALES ACCORDINGLY

NO	DATE	REVISION	BY	APVD

FOR REFERENCE ONLY
PROJECT MANAGER RFP
(NOT FOR CONSTRUCTION)

REGISTERED PROFESSIONAL ENGINEER JOSEPH A. RIESS No. C66413 CIVIL STATE OF CALIFORNIA 3/25/2024

DESIGN J. BOYLES
DRAWN J. ISIDORO
CHECKED B. YOUNG
APPROVED J. RIESS

WATERWORKS ENGINEERS
760 CYPRESS AVE SUITE 201, REDDING, CA. 96001

PARADISE IRRIGATION DISTRICT

WASHWATER EQUALIZER TANK REPLACEMENT PROJECT

PARADISE, CA

ELECTRICAL

LEGEND NO. 2

DATE MARCH 2024
PROJECT NO. 22-098
DRAWING NO. E-2
SHEET NO. 36

FILENAME: L:\CAD\Projects\22-098 PID WTP Equalizer Tank Replacement\07 Drawings\2298D-E002.dgn

PLOT DATE: 3/24/2024 PLOT TIME: 12:45:55 AM

PLAN VIEW SYMBOLS & GENERAL NOTES

PUSH POWER EQUIPMENT & DEVICES

PLAN VIEW	DESCRIPTION:
	EXPOSED CONDUIT
	HIDDEN / CONCEALED CONDUIT
UGE	UNDERGROUND CONDUIT
EDB	DUCT BANK
OHE	OVERHEAD POWER LINES
GND	GROUNDING CONDUCTOR
	CONDUITS TURNED DOWN
	CONDUITS TURNED UP
	CONDUIT STUBBED OUT AND CAPPED
	FLEXIBLE CONDUIT OR MANUFACTURER'S CABLE(S)
	FLEXIBLE CONDUIT OR MANUFACTURER'S CABLE(S)
(2)-3"C, 3-#3/0, 1-#2G	DENOTES A QUANTITY OF TWO (2) 3-INCH CONDUITS EACH CONTAINING THREE NO. 3/0 AWG CONDUCTORS AND 1 NO. 2 AWG GROUND CONDUCTOR
2 PR #16 TWSH	DENOTES A QUANTITY OF TWO INSTRUMENT CABLES. EACH CABLE TO CONSIST OF TWO NO. 16 AWG CONDUCTORS TWISTED TOGETHER AND COVERED WITH A METALLIC SHIELD AND AN OVERALL PROTECTIVE JACKET. REFER TO THE SPECIFICATIONS FOR THE EXACT CABLE TO BE PROVIDED.
2 TR #16 TWSH	SAME AS ABOVE EXCEPT CABLE TO CONSIST OF THREE NO. 16 AWG CONDUCTORS TWISTED, SHIELDED AND COVERED WITH AN OVERALL PROTECTIVE JACKET. REFER TO THE SPECIFICATIONS FOR THE EXACT CABLE TO BE PROVIDED.
2 PR #16 TW	DENOTES A QUANTITY OF TWO INSTRUMENT CABLES. EACH CABLE TO CONSIST OF TWO NO. 16 AWG CONDUCTORS TWISTED TOGETHER AND AN OVERALL PROTECTIVE JACKET. REFER TO THE SPECIFICATIONS FOR THE EXACT CABLE TO BE PROVIDED.
(3)-4"C	THREE 4-INCH CONDUITS

AREA CLASSIFICATION

PLAN VIEW	DESCRIPTION:
DAMP	INDICATES THAT ALL ELECTRICAL EQUIPMENT AND MATERIALS INSTALLED WITHIN THE ROOM OR AREA IN WHICH THIS NOTATION APPEARS SHALL BE OF NEMA 12 CONSTRUCTION (OR GASKETED AND SUITABLE FOR USE IS A WET LOCATION WHERE NEMA STANDARDS DO NOT APPLY) UNLESS OTHERWISE NOTED.
WET	INDICATES THAT ALL ELECTRICAL EQUIPMENT AND MATERIALS INSTALLED WITHIN THE ROOM OR AREA IN WHICH THIS NOTATION APPEARS SHALL BE OF NEMA 4X CONSTRUCTION (OR GASKETED AND SUITABLE FOR USE IN A WET LOCATION WHERE NEMA STANDARDS DO NOT APPLY) UNLESS OTHERWISE NOTED.
CORROSIVE	INDICATES THAT ALL ELECTRICAL EQUIPMENT AND MATERIALS INSTALLED WITHIN THE ROOM OR AREA IN WHICH THIS NOTATION APPEARS SHALL BE OF NEMA 4X CONSTRUCTION (OR GASKETED AND SUITABLE FOR USE IN A WET LOCATION WHERE NEMA STANDARDS DO NOT APPLY) UNLESS OTHERWISE NOTED.
CLASS 1, DIV. 1 GROUP D	INDICATES THAT ALL ELECTRICAL EQUIPMENT AND MATERIALS INSTALLED WITHIN THE ROOM OR AREA IN WHICH THIS NOTATION APPEARS SHALL CONFORM TO N.E.C. REQUIREMENTS FOR THE HAZARDOUS AREA CLASSIFICATION SHOWN.

TELECOMMUNICATION SYSTEM

PLAN VIEW	DESCRIPTION:
TTB	TELEPHONE TERMINAL BOARD 4FT X 8FT X 3/4 INCH UNLESS NOTED OTHERWISE
	TELEPHONE OUTLET, WALL TYPE (MOUNT 1'-6" AFF UNO)
	TELEPHONE OUTLET AND FLOOR BOX
	TELEPHONE/DATA OUTLET, WALL TYPE (MOUNT 1'-6" AFF UNO)
	TELEPHONE/DATA OUTLET AND FLOOR BOX
####	PAGING SPEAKER, WALL MOUNTED "H1" AND "C1" DENOTES TYPE. H=HORNC=CONE
#### #### ####	PAGING SPEAKER, WALL MOUNTED, BIDIRECTIONAL NOTATIONS SAME AS ABOVE
####	PAGING SPEAKER, FLUSH MOUNTED CEILING TYPE
S	PAGING STATION, SURFACE MOUNTED
VC	REMOTE WALL MOUNTED VOLUME CONTROL. FOR CEILING SPEAKER (MOUNT UP 5'-0" AFF UNO)
A	PAGING SPEAKER AMPLIFIER ASSEMBLY

SECUTITY SYSTEM

PLAN VIEW	DESCRIPTION:
KP	SECURITY SYSTEM KEY PAD
CR	SECURITY SYSTEM CARD ACCESS READER
MD	SECURITY ALARM MOTION DETECTOR
CCTV	CLOSED CIRCUIT TV CAMERA

GENERAL NOTES:

VERIFY SCALE

BAR IS ONE INCH ON ORIGINAL DRAWING

0 1"

IF NOT ONE INCH ON THIS SHEET, ADJUST SCALES ACCORDINGLY

NO	DATE	REVISION	BY	APVD

FOR REFERENCE ONLY
PROJECT MANAGER RFP
(NOT FOR CONSTRUCTION)

REGISTERED PROFESSIONAL ENGINEER JOSEPH A. RIESS No. C66413 CIVIL STATE OF CALIFORNIA 3/25/2024

DESIGN: J. BOYLES
DRAWN: J. ISIDORO
CHECKED: B. YOUNG
APPROVED: J. RIESS

WATERWORKS ENGINEERS
760 CYPRESS AVE SUITE 201, REDDING, CA. 96001

PARADISE IRRIGATION DISTRICT

WASHWATER EQUALIZER TANK REPLACEMENT PROJECT

PARADISE, CA

ELECTRICAL

LEGEND NO. 3

DATE: MARCH 2024
PROJECT NO.: 22-098
DRAWING NO.: E-3
SHEET NO.: 37

FILENAME: L:\CAD\Projects\22-098 PID WTP Equalizer Tank Replacement\07 Drawings\2298D-E003.dgn

PLOT DATE: 3/24/2024 PLOT TIME: 12:45:32 AM

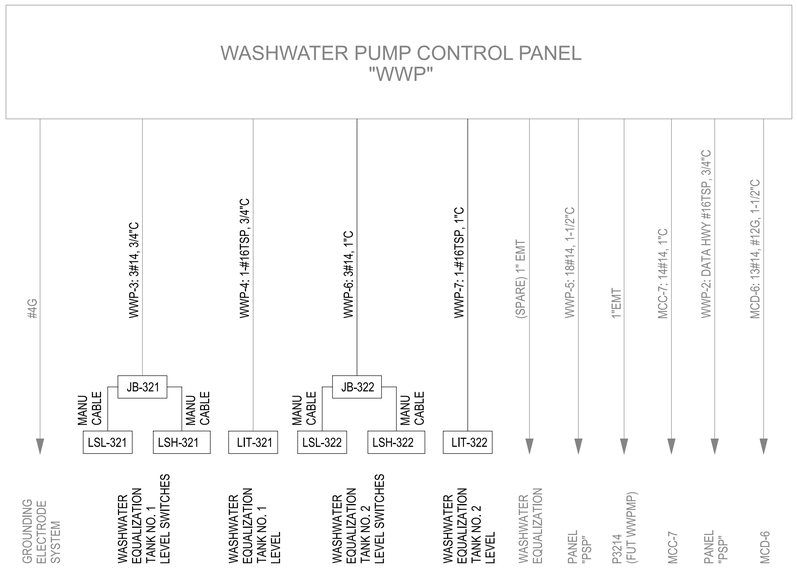

WASHWATER PUMP CONTROL PANEL BLOCK DIAGRAM

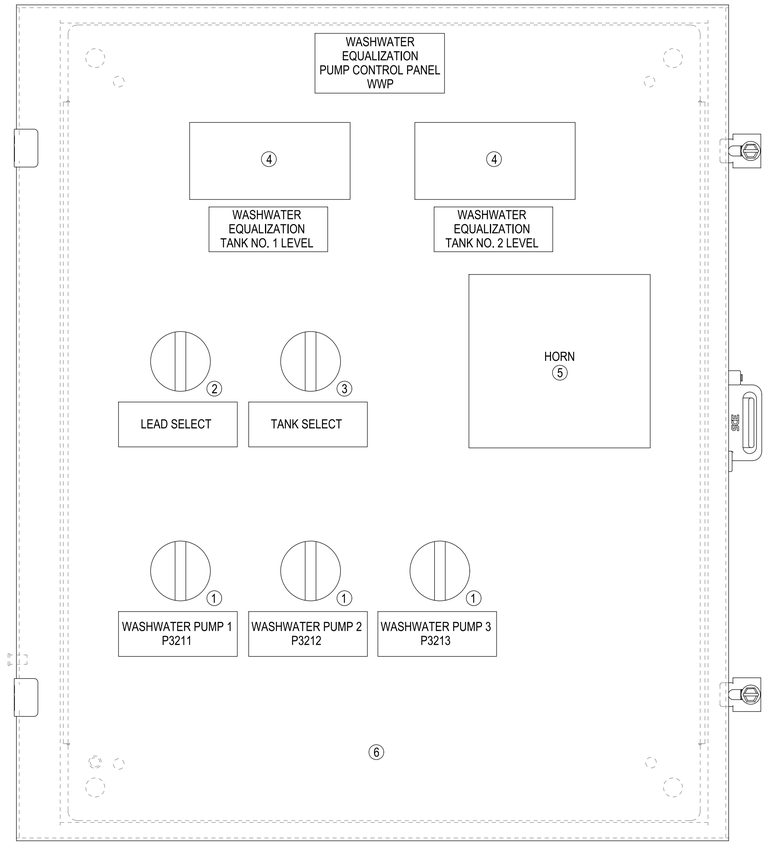

WASHWATER PUMP CONTROL PANEL DOOR ELEVATION

NOTES:

1. DURING PHASE 1 PROVIDE NEW CONDUITS AND CONDUCTORS TO THE NEW LEVEL SWITCHES AND LEVEL TRANSMITTER AT NEW WASHWATER EQUALIZATION TANK NO. 2. ROUTE THESE CONDUITS ALONG THE WALL, AND ALONG WITH THE NEW 2W PIPING.
2. DURING PHASE 2 DEMOLISH EXISTING LSL-321, LSH-321, AND LIT-321 ASSOCIATED WITH THE EXISTING TANK. PROVIDE NEW LEVEL SWITCHES AND LEVEL TRANSMITTER ON THE NEW WASHWATER EQUALIZATION TANK NO. 1.
3. DURING PHASE 2 PROVIDE NEW CABLES AND A PULL BOX AT NEW WASHWATER EQUALIZATION TANK NO. 1. REUSE EXISTING CONDUITS. PROVIDE NEW CONDUITS FROM PULL BOX TO LEVEL INSTRUMENTS.
4. DURING PHASE 1 REPLACE EXISTING DOOR ON THE WASHWATER PUMP CONTROL PANEL (WWP). REUSE HORN FROM EXISTING PANEL ON NEW DOOR.

BILL OF MATERIALS

ITEM	QUANTITY	DESCRIPTION	MODEL NUMBER	MANUFACTURER
1	3	30.5 MM, TYPE 4/13, 3 POSITION, KNOB LEVER MAINTAINED	800T-J17	ALLEN BRADLEY
2	1	30.5 MM, TYPE 4/13, 4 POSITION, KNOB LEVER MAINTAINED	800T-N17kf4	ALLEN BRADLEY
3	1	30.5 MM, TYPE 4/13, 2 POSITION, KNOB LEVER MAINTAINED, 1NO, 1NC	800T-H17AF	ALLEN BRADLEY
4	2	PROCESS METER WITH BACKLIGHT DISPLAY	CUB5PB00	RED LION
5	1	HORN		
6	1	24"H X 20"W REPLACEMENT DOOR		SAGINAW

WASHWATER PUMP CONTROL PANEL BILL OF MATERIALS

VERIFY SCALE
BAR IS ONE INCH ON ORIGINAL DRAWING
0 1"
IF NOT ONE INCH ON THIS SHEET, ADJUST SCALES ACCORDINGLY

NO	DATE	REVISION	BY	APVD

FOR REFERENCE ONLY
PROJECT MANAGER RFP
(NOT FOR CONSTRUCTION)

REGISTERED PROFESSIONAL ENGINEER JOSEPH A. RIESS No. C66413 CIVIL STATE OF CALIFORNIA 3/25/2024

DESIGN J. BOYLES
DRAWN J. ISIDORO
CHECKED B. YOUNG
APPROVED J. RIESS

WATERWORKS ENGINEERS
760 CYPRESS AVE SUITE 201, REDDING, CA. 96001

PARADISE IRRIGATION DISTRICT
WASHWATER EQUALIZER TANK REPLACEMENT PROJECT
PARADISE, CA

ELECTRICAL
EXISTING WASHWATER PUMP CONTROL PANEL BLOCK DIAGRAM AND ELEVATION

DATE MARCH 2024
PROJECT NO. 22-098
DRAWING NO. E-4
SHEET NO. 38

FILENAME: L:\CAD\Projects\22-098 PID WTP Equalizer Tank Replacement\07 Drawings\2298D-E004.dgn
PLOT DATE: 3/24/2024 PLOT TIME: 4:15:47 AM

NOTES:

1. DURING PHASE 1 PROVIDE TWO NEW WARRICK LEVEL RELAYS FOR THE NEW LEVEL SWITCHES LSL-322 AND LSH-322 AT WASHWATER EQUALIZATION TANK NO. 2.
2. DURING PHASE 1 PROVIDE A NEW PANEL DOOR, AS SHOWN ON SHEET E-4, WITH TWO NEW RED LION DISPLAYS FOR THE TWO TANK LEVELS.
3. DURING PHASE 2 PROVIDE NEW LEVEL SWITCHES LSL-321 AND LSH-321 AT WASHWATER EQUALIZATION TANK NO. 2. REUSE EXISTING POINTS.

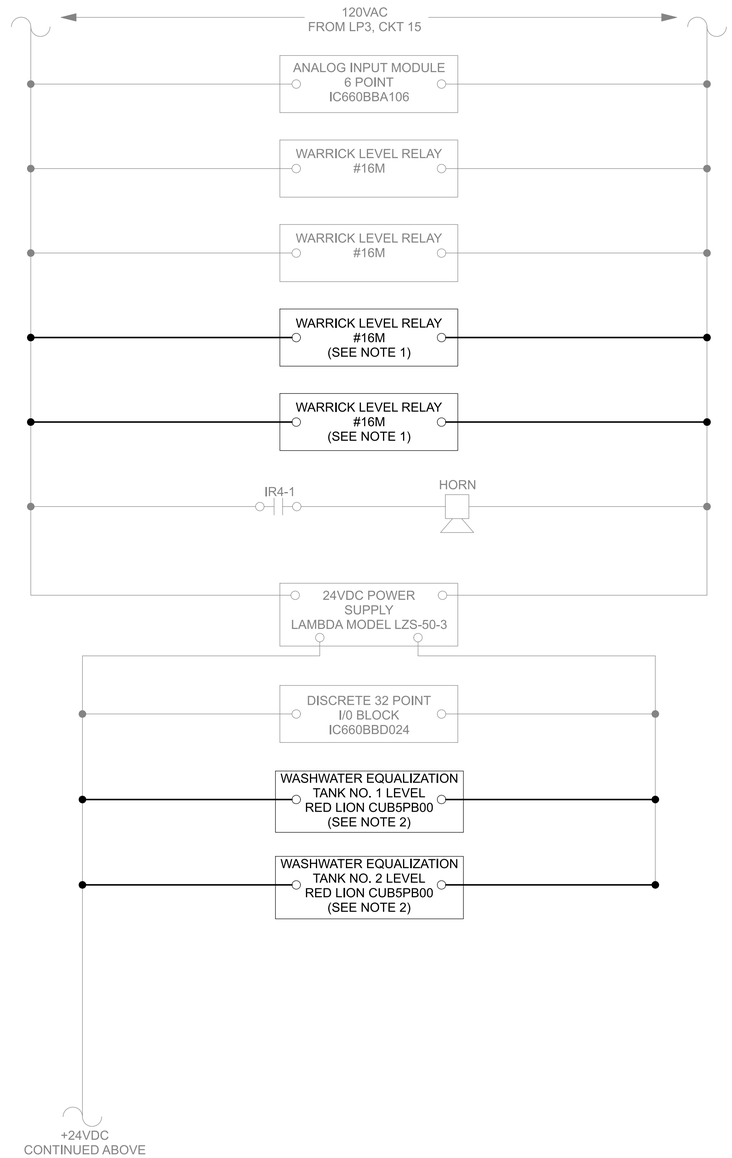

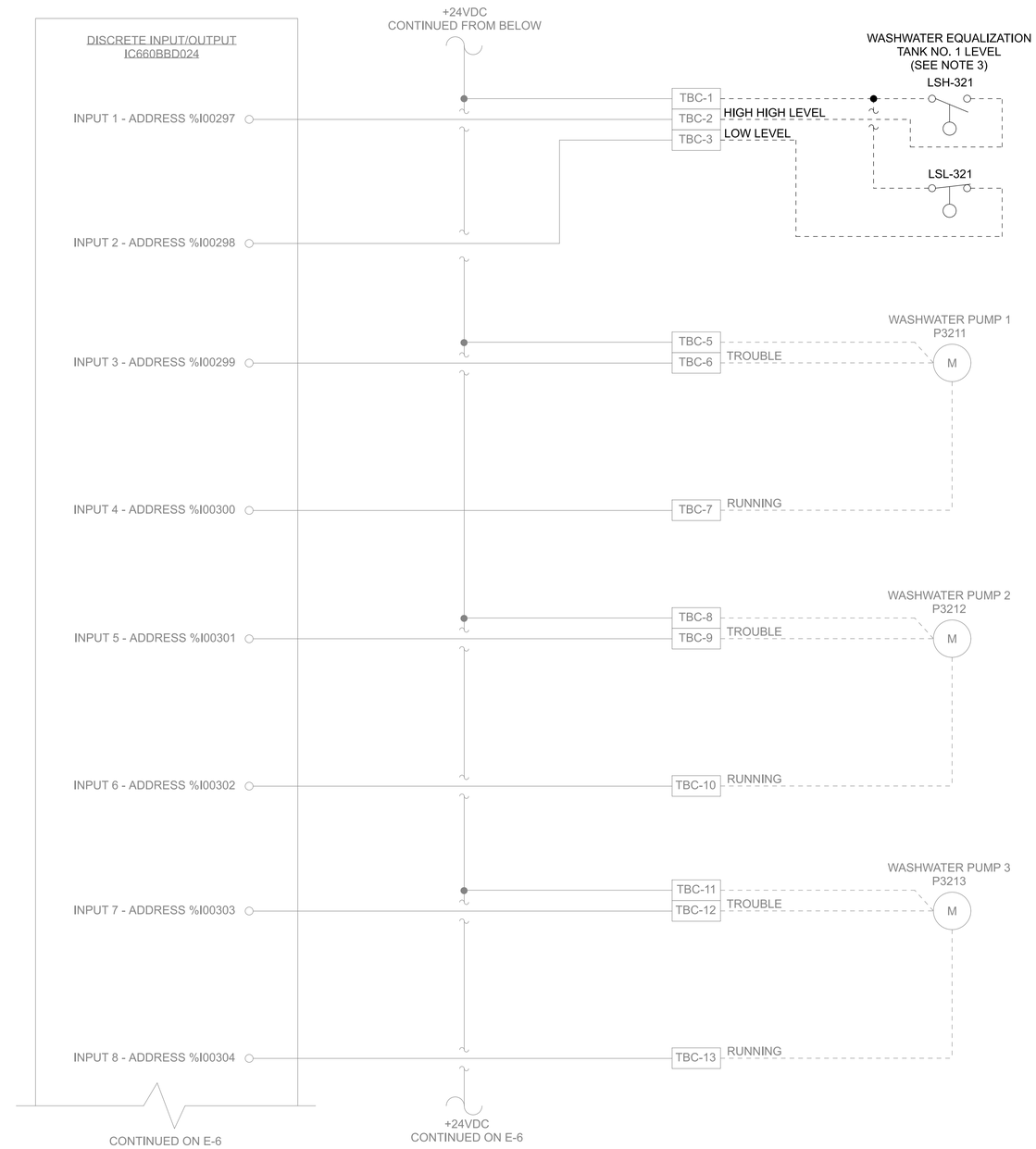

VERIFY SCALE

BAR IS ONE INCH ON ORIGINAL DRAWING

0 1"

IF NOT ONE INCH ON THIS SHEET, ADJUST SCALES ACCORDINGLY

NO	DATE	REVISION	BY	APVD

FOR REFERENCE ONLY
PROJECT MANAGER RFP
(NOT FOR CONSTRUCTION)

REGISTERED PROFESSIONAL ENGINEER JOSEPH A. RIESS No. C66413 CIVIL STATE OF CALIFORNIA 3/25/2024

DESIGN: J. BOYLES
DRAWN: J. ISIDORO
CHECKED: B. YOUNG
APPROVED: J. RIESS

WATERWORKS ENGINEERS
760 CYPRESS AVE SUITE 201, REDDING, CA. 96001

PARADISE IRRIGATION DISTRICT

WASHWATER EQUALIZER TANK REPLACEMENT PROJECT

PARADISE, CA

ELECTRICAL

EXISTING WASHWATER PUMP CONTROL PANEL SCHEMATIC 1

DATE: MARCH 2024
PROJECT NO.: 22-098
DRAWING NO.: E-5
SHEET NO.: 39

FILENAME: L:\CAD\Projects\22-098 PID WTP Equalizer Tank Replacement\07 Drawings\2298D-E005.dgn

PLOT DATE: 3/24/2024 PLOT TIME: 12:59:55 AM

NOTES:
1. DURING PHASE 1 DEMOLISH THE EXISTING PANEL DOOR, INCLUDING THE EXISTING ANNUNCIATOR WINDOWS, AND PROVIDE A NEW PANEL DOOR, AS SHOWN ON E-4, WITH A NEW LEAD SELECT SWITCH AND PUMP HOA SWITCHES.

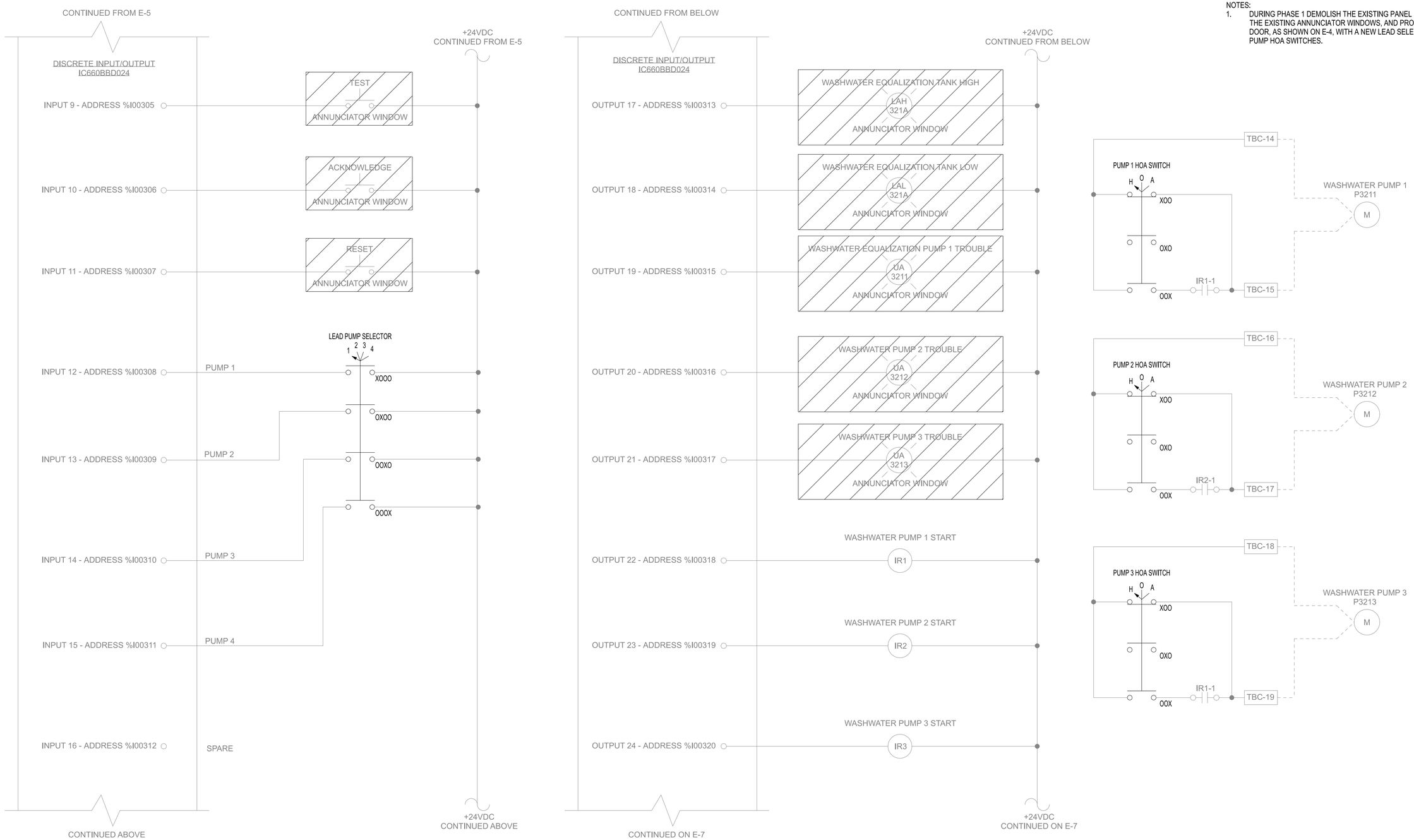

VERIFY SCALE	NO	DATE	REVISION	BY	APVD
BAR IS ONE INCH ON ORIGINAL DRAWING 0 1" IF NOT ONE INCH ON THIS SHEET, ADJUST SCALES ACCORDINGLY			FOR REFERENCE ONLY PROJECT MANAGER RFP (NOT FOR CONSTRUCTION)		

REGISTERED PROFESSIONAL ENGINEER JOSEPH A. RIESS No. C66413 CIVIL STATE OF CALIFORNIA 3/25/2024

DESIGN: J. BOYLES
DRAWN: J. ISIDORO
CHECKED: B. YOUNG
APPROVED: J. RIESS

WATERWORKS ENGINEERS
760 CYPRESS AVE SUITE 201, REDDING, CA. 96001

PARADISE IRRIGATION DISTRICT
WASHWATER EQUALIZER TANK REPLACEMENT PROJECT
PARADISE, CA

ELECTRICAL
EXISTING WASHWATER PUMP CONTROL PANEL SCHEMATIC 2

DATE: MARCH 2024
PROJECT NO.: 22-098
DRAWING NO.: E-6
SHEET NO.: 40

FILENAME: L:\CAD\Projects\22-098 PID WTP Equalizer Tank Replacement\07 Drawings\2298D-E006.dgn
PLOT DATE: 3/24/2024 PLOT TIME: 1:05:55 AM

NOTES:

1. DURING PHASE 1 DEMOLISH THE EXISTING PANEL DOOR, INCLUDING THE EXISITING ANNUNCIATOR WINDOWS AND PROVIDE A NEW PANEL DOOR, AS SHOWN ON E-4, WITH A TANK SELECTOR SWITCH.
2. DURING PHASE 1 PROVIDE NEW LEVEL SWITCHES, LSL-322 AND LSH-322, AT WASHWATER EQUALIZATION TANK NO. 2.
3. DURING PHASE 1 PROVIDE A NEW LEVEL TRANSMITTER, LIT-322, AT NEW WASHWATER EQUALIZATION TANK NO. 2.
4. DURING PHASE 2 PROVIDE A NEW LEVEL TRANSMITTER, LIT-321, AT NEW WASHWATER EQUALIZATION TANK NO. 1.

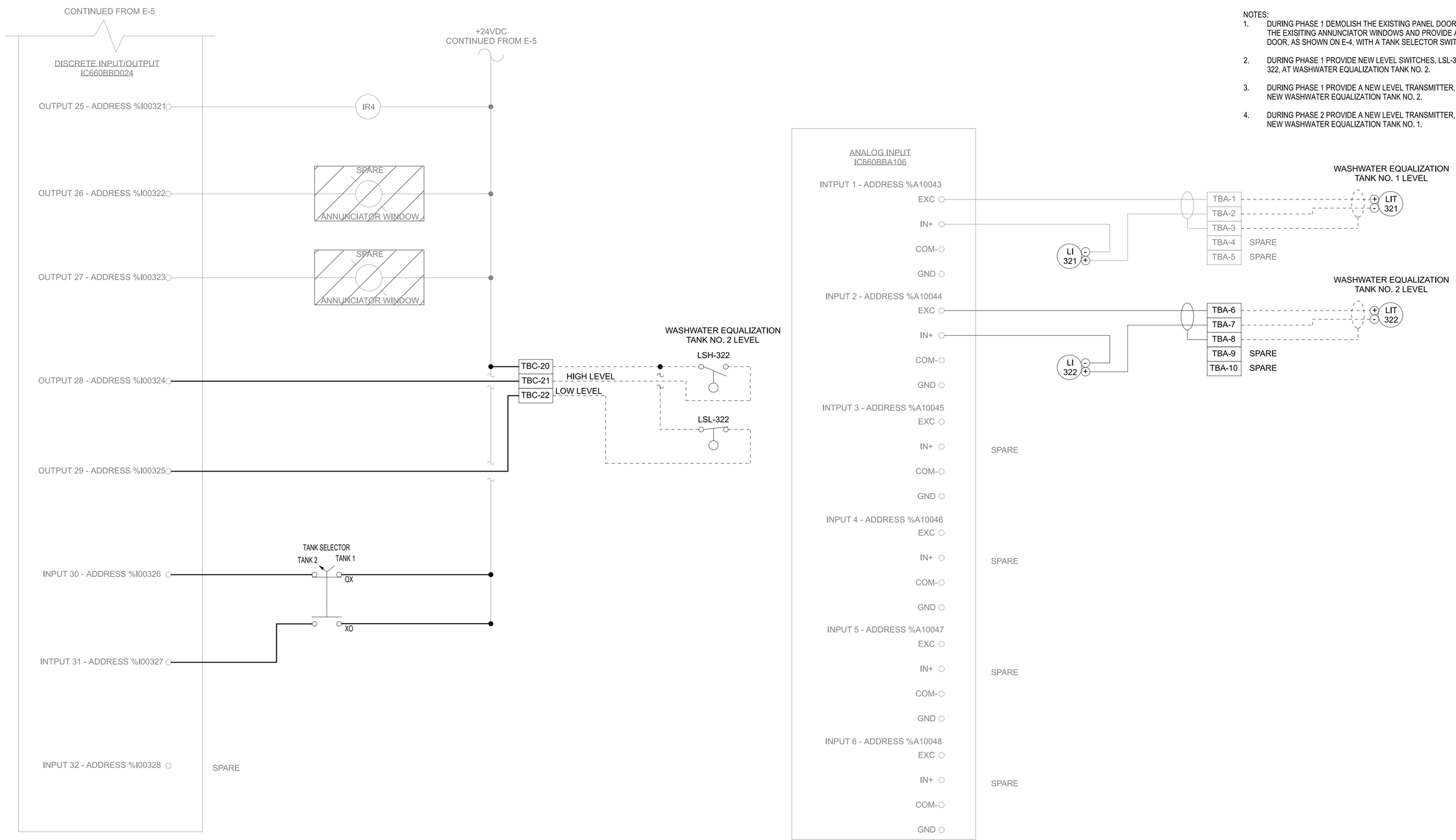

VERIFY SCALE

BAR IS ONE INCH ON ORIGINAL DRAWING

0 1"

IF NOT ONE INCH ON THIS SHEET, ADJUST SCALES ACCORDINGLY

NO	DATE	REVISION	BY	APVD

FOR REFERENCE ONLY
PROJECT MANAGER RFP
(NOT FOR CONSTRUCTION)

REGISTERED PROFESSIONAL ENGINEER JOSEPH A. RIESS No. C66413 CIVIL STATE OF CALIFORNIA 3/25/2024

DESIGN: J. BOYLES
DRAWN: J. ISIDORO
CHECKED: B. YOUNG
APPROVED: J. RIESS

WATERWORKS ENGINEERS
760 CYPRESS AVE SUITE 201, REDDING, CA. 96001

PARADISE IRRIGATION DISTRICT

WASHWATER EQUALIZER TANK REPLACEMENT PROJECT

PARADISE, CA

ELECTRICAL

EXISTING WASHWATER PUMP CONTROL PANEL SCHEMATIC 3

DATE: MARCH 2024
PROJECT NO.: 22-098
DRAWING NO.: E-7
SHEET NO.: 41

FILENAME: L:\CAD\Projects\22-098 PID WTP Equalizer Tank Replacement\07 Drawings\2298D-E007.dgn

PLOT DATE: 3/25/2024 PLOT TIME: 9:10:57 AM

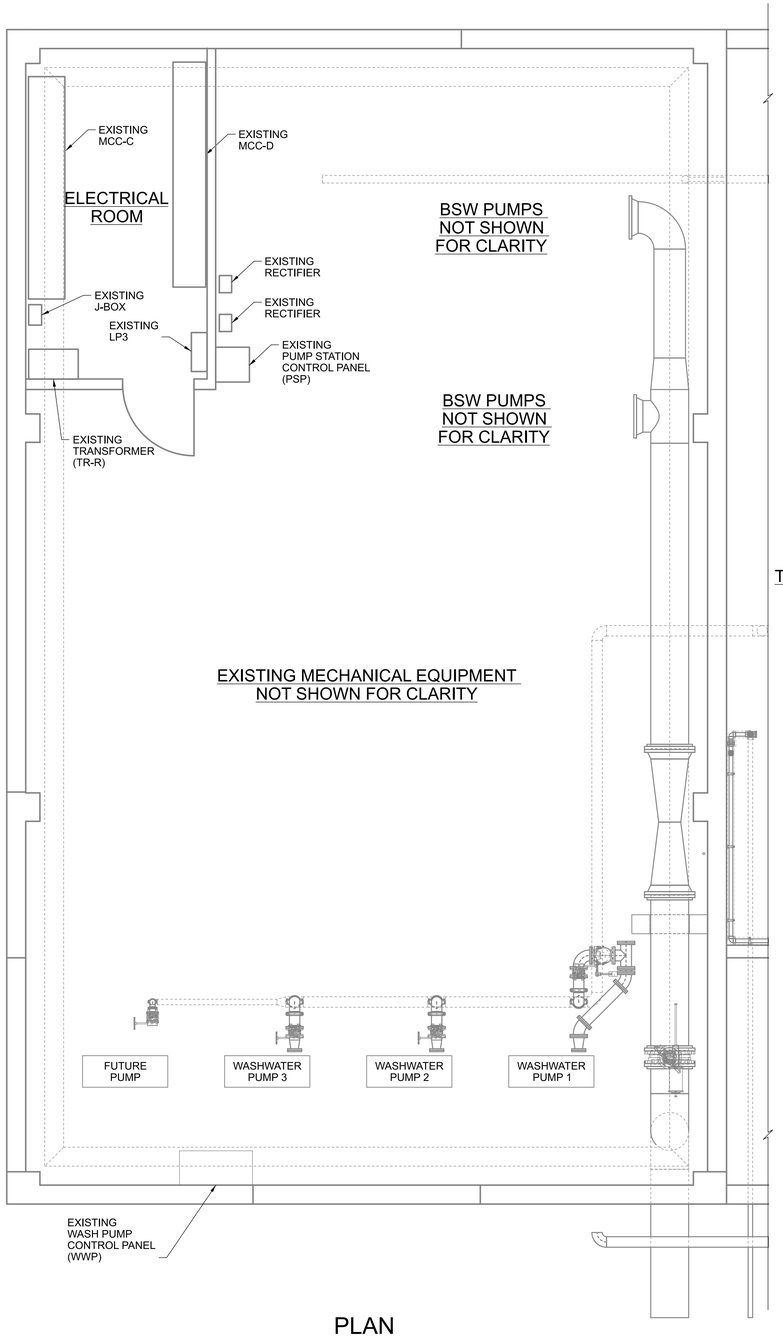

PLAN

1/4"=1'-0"

GENERAL NOTES

1. DURING PHASE 2 INTERCEPT EXISTING CONDUITS FROM WWP TO LSL-321, LSH-321, AND LIT-321 AT EXISTING TANK NO. 1. ROUTE CONDUITS TO NEW LOCATION FOR TANK NO. 1 LEVEL ELEMENTS. PULL A MANDREL THROUGH THE CONDUITS TO ENSURE THE EXISTING PORTION IS CLEAN. ROUTE NEW CONDUITS ALONG THE WALL OF NEW TANK NO. 1.
2. DURING PHASE 1 PROVIDE NEW CONDUIT FROM EXISTING WWP TO LSL-322, LSH-322, AND LIT-322 AT NEW TANK NO. 2.
3. DURING PHASE 1 PROVIDE NEW PANEL DOOR ON EXISTING PANEL WWP.
4. DURING PHASE 1 INSTALL ADDITIONAL COMPONENTS AND WIRING IN PANEL WWP FOR THE ADDITION OF TANK NO. 2 LEVEL ELEMENTS. ADJUST EXISTING WIRING AS REQUIRED.
5. DURING PHASE 1 PROVIDE A CONDUIT FROM LP3, CKT 15 TO A NEW POLE MOUNTED LIGHT/GFCI RECEPTACLE BETWEEN TANK NO. 1 AND TANK NO. 2.
6. DURING PHASE 1 PROVIDE A CONDUIT FROM LP3, CKT 19 TO A NEW GFCI RECEPTACLES FOR THE DAVIT CRANE.

EXISTING LP3

100	AMP MAIN CIRCUIT BREAKER RATING				22	KA SHORT CIRCUIT RATING		LOCATION:	ELECTRICAL ROOM IN PUMP BUILDING
100	AMP BUS RATING	24	POLES			ELECTRONIC GRADE: NO		ENCLOSURE:	NEMA 3R
208/120	VOLTS	3	PHASE	3	WIRE	60	HZ	MOUNTING:	SURFACE

CIRCUIT NO.	DESCRIPTION	LOAD KVA PHASE A	PHASE B	PHASE C	TYPE	BREAKER AMPS	NOTES	CIRCUIT NO.	DESCRIPTION	LOAD KVA PHASE A	PHASE B	PHASE C	TYPE	BREAKER AMPS	NOTES
1	LIGHTING - PUMP BUILDING	1.20			CONT	20/1		2	RECEPTACLES - PUMP BUILDING	0.72			CONT	20/1	
3	LIGHITNG - PUMP BUILDING		1.20		CONT	20/1		4	RECEPTACLES - PUMP BUILDING		0.72		CONT	20/1	
5	LIGHTING - PUMP BUILDING EXTERIOR			0.40	CONT	20/1		6	BI-SULF HEAT TRACE LINES			0.30	CONT	20/1	
7	EXHAUST FAN 1 F3513	0.51			CONT	20/1		8	BI SULF PUMP PNL SB-300	0.30			CONT	20/1	
9	EXHAUST FAN 2 F3514		0.51		CONT	20/1		10	MCC-C HEATER		0.00		CONT	20/1	
11	EXHAUST FAN 3 F3515			0.51	CONT	20/1		12	MCC-D HEATER			0.00	CONT	20/1	
13	ELCTRICAL ROOM SUPPLY FAN F3516	0.17			CONT	20/1		14	BI-SULFITE TANK TRACE	0.00			CONT	20/2	
15	POLE LIGHT		0.60		CONT	20/1		16			0.00		CONT	20/2	
17	PUMP STATION CONTROL PANEL (PSP)			0.80	CONT	20/1		18	WASHWATER PUMP CONTROL PANEL			0.00	CONT	20/1	
19	DAVIT CRANE RECEPTACLES	0.30			CONT	20/1		20	OLD RECTIFIER	0.00			CONT	20/1	
21	DAM GATE VALVE		0.00		CONT	20/1		22	NEW RECTIFIER		0.00		CONT	20/2	
23	MH #2 SUMP PUMP			0.00	CONT	20/1		24				0.00	CONT	20/2	
	SUM OF KVA (ODD):	2.180	2.310	1.710	TRANSFORMER KVA:	9	MIN		SUM OF KVA (EVEN):	1.020	0.720	0.300	25% LARGEST MOTOR:		0
	FEEDER KVA (ODD):	2.725	2.888	2.138					FEEDER KVA (EVEN):	1.275	0.900	0.375	TOTAL FEEDER KVA:		11
									FEEDER AMPS/PHASE	34	32	21	MAX AMPS:		34

EXISTING LP3 PANEL SCHEDULE

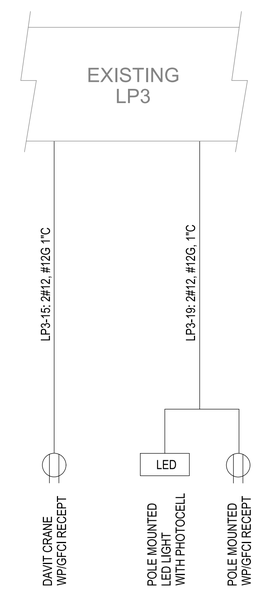

EXISTING LP3 PARTIAL BLOCK DIAGRAM

4 0 4 8 FEET
SCALE 1/4"=1'-0"

VERIFY SCALE
BAR IS ONE INCH ON ORIGINAL DRAWING
0 1"
IF NOT ONE INCH ON THIS SHEET, ADJUST SCALES ACCORDINGLY

NO	DATE	REVISION	BY	APVD

FOR REFERENCE ONLY
PROJECT MANAGER RFP
(NOT FOR CONSTRUCTION)

REGISTERED PROFESSIONAL ENGINEER JOSEPH A. RIESS No. C66413 CIVIL STATE OF CALIFORNIA 3/25/2024

DESIGN: J. BOYLES
DRAWN: J. BOYLES
CHECKED: B. YOUNG
APPROVED: J. RIESS

WATERWORKS ENGINEERS
760 CYPRESS AVE SUITE 201, REDDING, CA. 96001

PARADISE IRRIGATION DISTRICT
WASHWATER EQUALIZER TANK REPLACEMENT PROJECT
PARADISE, CA

ELECTRICAL
PHASE 1
PUMP BUILDING PLAN AND LP3 BLOCK DIAGRAM

DATE: MARCH 2024
PROJECT NO.: 22-098
DRAWING NO.: 1-E-1
SHEET NO.: 42

FILENAME: L:\CAD\Projects\22-098 PID WTP Equalizer Tank Replacement\07 Drawings\2298D-10E101.dgn
PLOT DATE: 3/24/2024 PLOT TIME: 2:26:12 AM

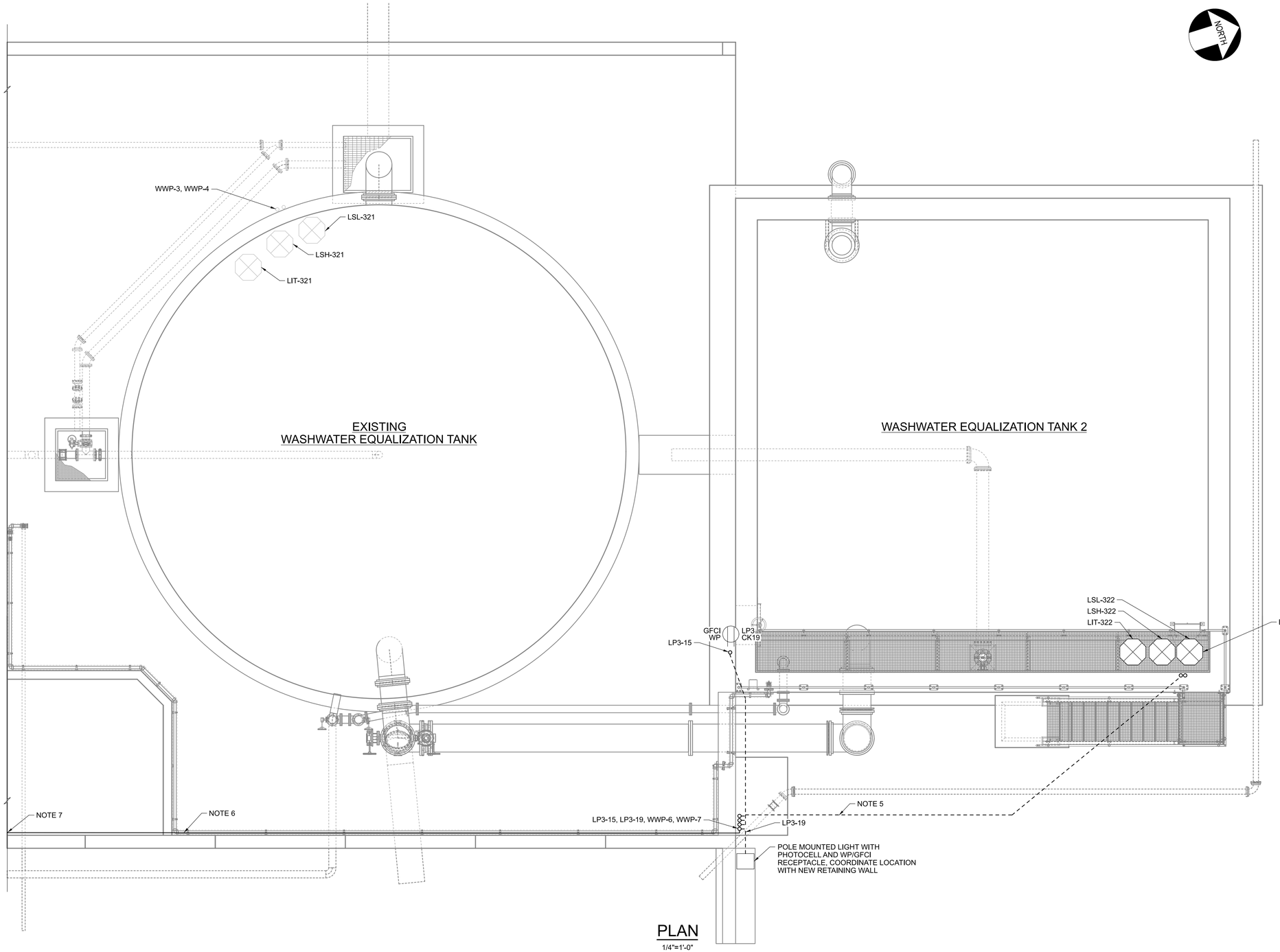

PLAN
1/4"=1'-0"

GENERAL NOTES

1. PROVIDE NEW CONDUIT FROM EXISTING WWP TO LSL-322, LSH-322, AND LIT-322 AT NEW TANK NO. 2.
2. PROVIDE A CONDUIT FROM LP3, CKT 15 TO A NEW POLE MOUNTED LIGHT/GFCI RECEPTACLE BETWEEN TANK NO. 1 AND TANK NO. 2.
3. PROVIDE A CONDUIT FROM LP3, CKT 19 TO NEW GFCI RECEPTACLES FOR THE DAVIT CRANE ON THE SOUTH SIDE OF THE WALKWAY.
4. POLE MOUNTED LIGHT SHALL BE LITHONIA DSX2 LED AREA LIGHTING ON A 10 FOOT RECTANGULAR POLE. PROVIDE A WP/GFCI RECEPTACLE ON THE POLE.
5. COORDINATE ROUTE OF CONDUITS TO DAVIT CRANE RECEPTACLE AND LEVEL ELEMENTS WITH THE 2W PIPING AS MUCH AS POSSIBLE. LIMIT BENDS AND OBSTRUCTIONS WITH PIPE CROSSINGS.
6. ROUTE CONDUIT ALONG THE SURFACE OF THE CONTAINMENT WALL TO ENTER THE BUILDING. CONDUIT SHALL BE PVC COATED GALVANIZED RIGID STEEL TYPE ABOVE GRADE NEAR THE CONTAINMENT AREA.
7. PENETRATE BUILDING AND ROUTE CONDUITS ALONG THE SURFACE TO THEIR RESPECTIVE PANELS. CONDUITS INSIDE THE BUILDING SHALL BE GALVANIZED RIGID STEEL.

4 0 4 8 FEET
SCALE 1/4"=1'-0"

VERIFY SCALE
BAR IS ONE INCH ON ORIGINAL DRAWING
0 1"
IF NOT ONE INCH ON THIS SHEET, ADJUST SCALES ACCORDINGLY

NO	DATE	REVISION	BY	APVD

FOR REFERENCE ONLY
PROJECT MANAGER RFP
(NOT FOR CONSTRUCTION)

REGISTERED PROFESSIONAL ENGINEER JOSEPH A. RIESS No. C66413 CIVIL STATE OF CALIFORNIA 3/25/2024

DESIGN J. BOYLES
DRAWN J. BOYLES
CHECKED B. YOUNG
APPROVED J. RIESS

WATERWORKS ENGINEERS
760 CYPRESS AVE SUITE 201, REDDING, CA. 96001

PARADISE IRRIGATION DISTRICT
WASHWATER EQUALIZER TANK REPLACEMENT PROJECT
PARADISE, CA

ELECTRICAL
PHASE 1
TANK 2 CONDUIT PLAN

DATE MARCH 2024
PROJECT NO. 22-098
DRAWING NO. 1-E-2
SHEET NO. 43

FILENAME: L:\CAD\Projects\22-098 PID WTP Equalizer Tank Replacement\07 Drawings\2298D-10E102.dgn
PLOT DATE: 3/24/2024 PLOT TIME: 2:25:36 AM

LEGEND

- 4/0 BARE COPPER GROUNDING CONDUCTOR
- 2/0 BARE COPPER GROUNDING CONDUCTOR
- CADWELD CONNECTION
- GROUNDING TAP CONNECTION
- GROUND ROD WITH TESTING WELL
- TESTING WELL

NORTH

GENERAL NOTES

1. PROVIDE 10' GROUND ROD WITH TEST WELL FOR GROUNDING SYSTEM.
2. PROVIDE CADWELDS FOR GROUNDING GRID CONNECTIONS.
3. REMOVE COATINGS FROM THE EQUIPMENT WHEN BONDING TO ENSURE METAL TOT METAL CONTACT.
4. BOND GROUNDING GRID TO EXISTING GROUNDING SYSTEM FOR THE PUMP STATION.

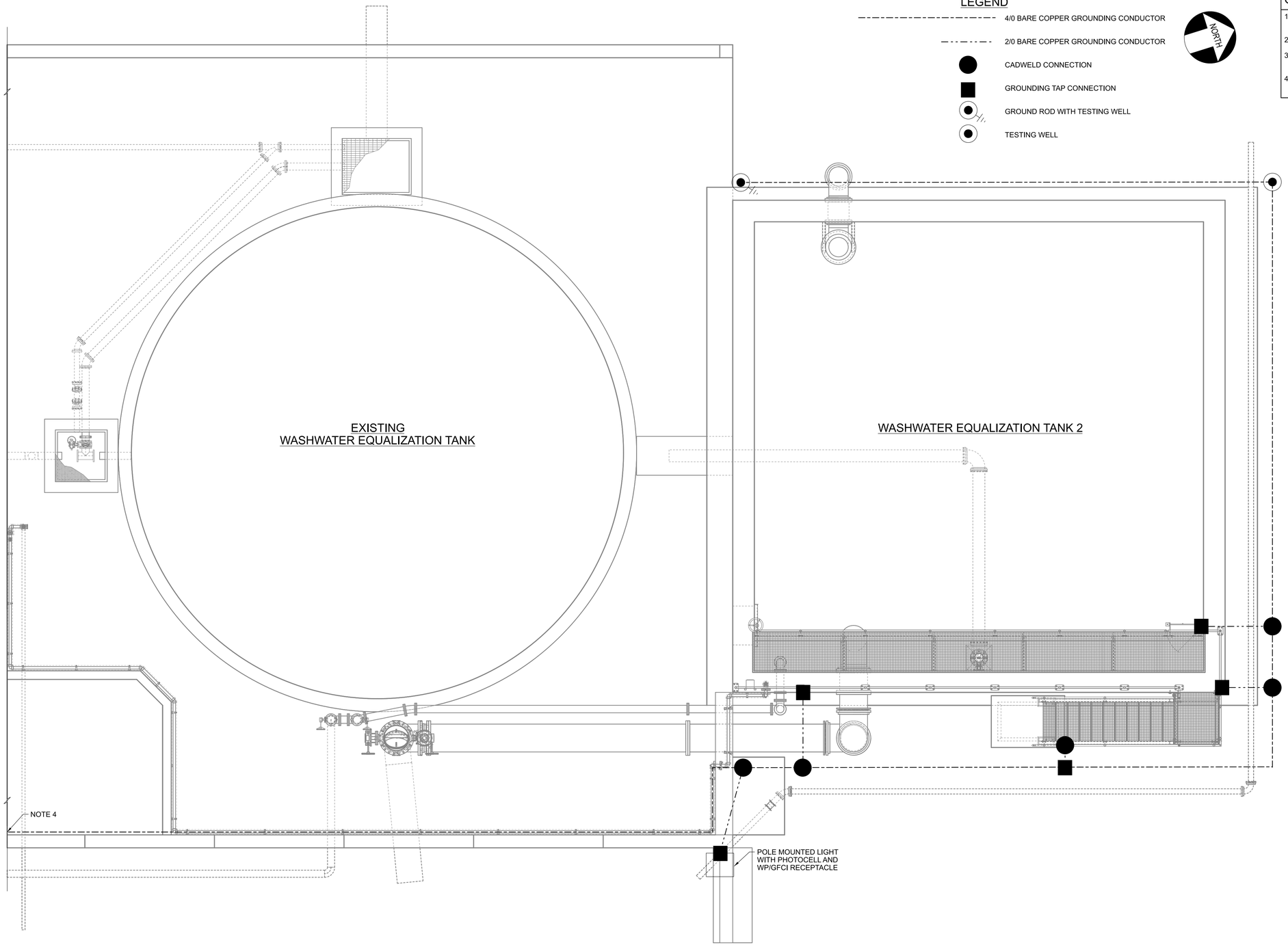

4 0 4 8 FEET
SCALE 1/4"=1'-0"

VERIFY SCALE

BAR IS ONE INCH ON ORIGINAL DRAWING
0 1"
IF NOT ONE INCH ON THIS SHEET, ADJUST SCALES ACCORDINGLY

NO	DATE	REVISION	BY	APVD

FOR REFERENCE ONLY
PROJECT MANAGER RFP
(NOT FOR CONSTRUCTION)

REGISTERED PROFESSIONAL ENGINEER JOSEPH A. RIESS No. C66413 CIVIL STATE OF CALIFORNIA 3/25/2024

DESIGN: J. BOYLES
DRAWN: J. BOYLES
CHECKED: B. YOUNG
APPROVED: J. RIESS

WATERWORKS ENGINEERS
760 CYPRESS AVE SUITE 201, REDDING, CA. 96001

PARADISE IRRIGATION DISTRICT

WASHWATER EQUALIZER TANK REPLACEMENT PROJECT

PARADISE, CA

ELECTRICAL

PHASE 1
TANK 2 GROUNDING PLAN

DATE: MARCH 2024
PROJECT NO.: 22-098
DRAWING NO.: 1-E-3
SHEET NO.: 44

FILENAME: L:\CAD\Projects\22-098 PID WTP Equalizer Tank Replacement\07 Drawings\2298D-10E103.dgn
PLOT DATE: 3/24/2024 PLOT TIME: 2:46:38 AM

GENERAL NOTES

1. PROTECT EXISTING CONDUITS WWP-3 AND WWP-4. PULL A MANDREL THROUGH THE CONDUITS TO ENSURE THE EXISTING PORTION IS CLEAN. ROUTE NEW CONDUITS ALONG THE WALL OF NEW TANK NO. 1 TO THE LEVEL ELEMENTS.

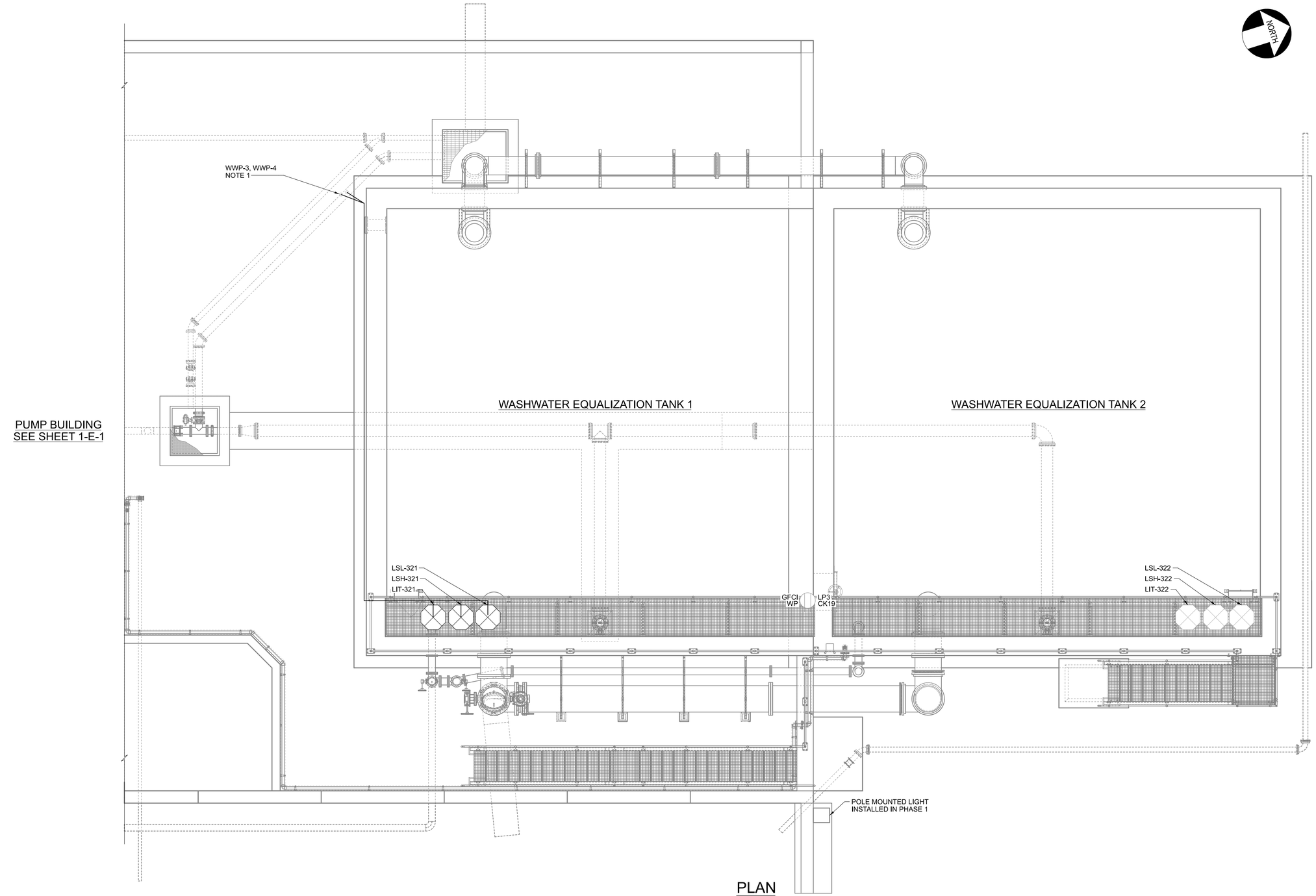

PLAN

1/4"=1'-0"

4 0 4 8 FEET

SCALE 1/4"=1'-0"

VERIFY SCALE

BAR IS ONE INCH ON ORIGINAL DRAWING

0 1"

IF NOT ONE INCH ON THIS SHEET, ADJUST SCALES ACCORDINGLY

NO	DATE	REVISION	BY	APVD

FOR REFERENCE ONLY
PROJECT MANAGER RFP
(NOT FOR CONSTRUCTION)

REGISTERED PROFESSIONAL ENGINEER JOSEPH A. RIESS No. C66413 CIVIL STATE OF CALIFORNIA 3/25/2024

DESIGN: J. BOYLES
DRAWN: J. BOYLES
CHECKED: B. YOUNG
APPROVED: J. RIESS

WATERWORKS ENGINEERS
760 CYPRESS AVE SUITE 201, REDDING, CA. 96001

PARADISE IRRIGATION DISTRICT

WASHWATER EQUALIZER TANK REPLACEMENT PROJECT

PARADISE, CA

ELECTRICAL

PHASE 2
TANK 1 CONDUIT PLAN

DATE: MARCH 2024
PROJECT NO.: 22-098
DRAWING NO.: 2-E-1
SHEET NO.: 45

FILENAME: L:\CAD\Projects\22-098 PID WTP Equalizer Tank Replacement\07 Drawings\2298D-20E101.dgn

PLOT DATE: 3/25/2024 PLOT TIME: 9:09:37 AM

LEGEND

- 4/0 BARE COPPER GROUNDING CONDUCTOR
- 2/0 BARE COPPER GROUNDING CONDUCTOR
- CADWELD CONNECTION
- GROUNDING TAP CONNECTION
- GROUND ROD WITH TESTING WELL
- TESTING WELL

NORTH

GENERAL NOTES

1. PROVIDE CADWELDS FOR GROUNDING GRID CONNECTIONS.
2. REMOVE COATINGS FROM THE EQUIPMENT WHEN BONDING TO ENSURE METAL TO METAL CONTACT.
3. CONNECT TANK 1 GROUNDING GRID TO TANK 2 GROUNDING GRID.

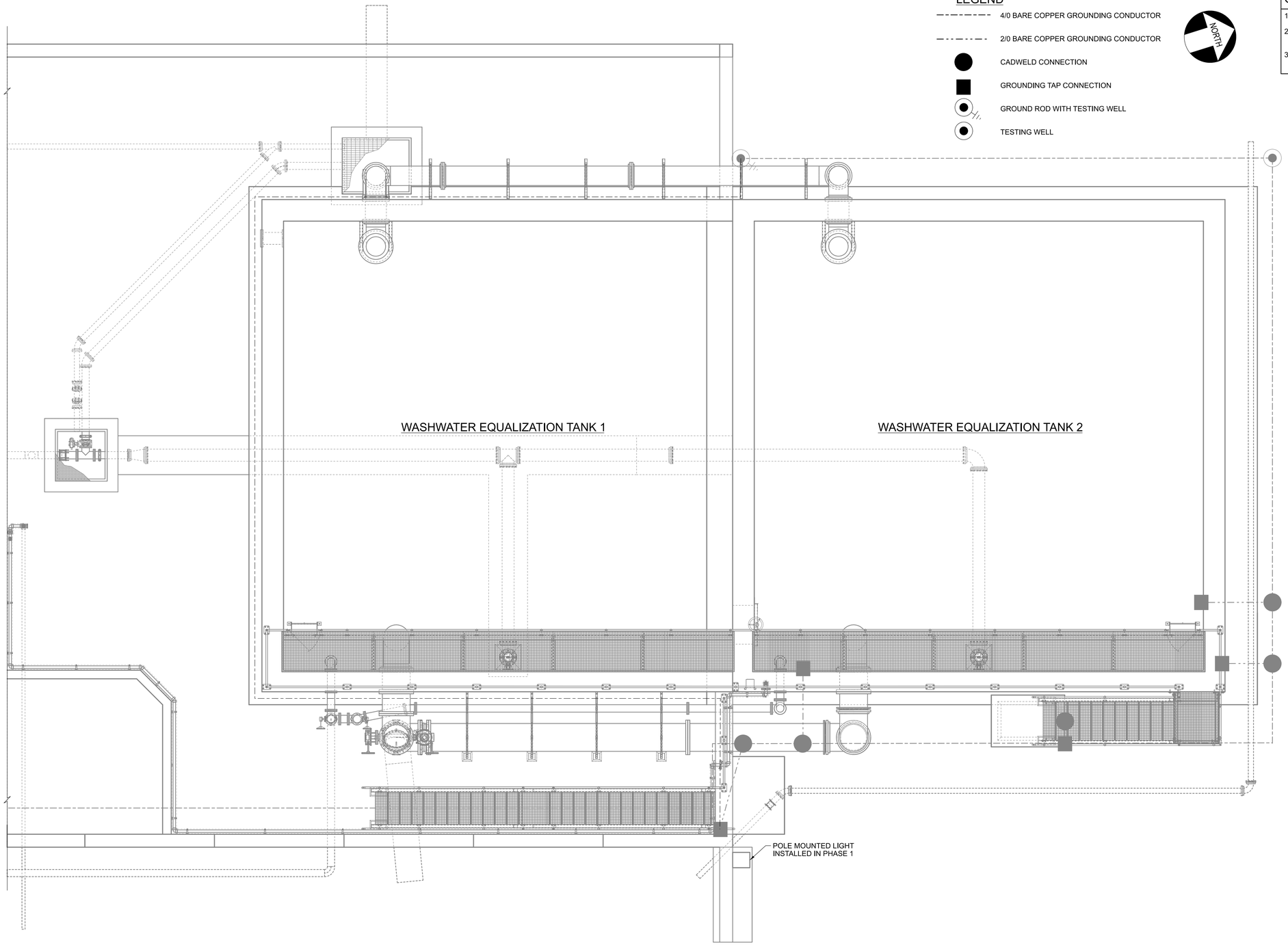

4 0 4 8 FEET
SCALE 1/4"=1'-0"

VERIFY SCALE

BAR IS ONE INCH ON ORIGINAL DRAWING
0 1"
IF NOT ONE INCH ON THIS SHEET, ADJUST SCALES ACCORDINGLY

NO	DATE	REVISION	BY	APVD

FOR REFERENCE ONLY
PROJECT MANAGER RFP
(NOT FOR CONSTRUCTION)

REGISTERED PROFESSIONAL ENGINEER JOSEPH A. RIESS No. C66413 CIVIL STATE OF CALIFORNIA 3/25/2024

DESIGN J. BOYLES
DRAWN J. BOYLES
CHECKED B. YOUNG
APPROVED J. RIESS

PLAN
4/13/2018

WATERWORKS ENGINEERS
760 CYPRESS AVE SUITE 201, REDDING, CA. 96001

PARADISE IRRIGATION DISTRICT

WASHWATER EQUALIZER TANK REPLACEMENT PROJECT

PARADISE, CA

ELECTRICAL

PHASE 2
TANK 1 GROUNDING PLAN

DATE MARCH 2024
PROJECT NO. 22-098
DRAWING NO. 2-E-2
SHEET NO. 46

FILENAME: L:\CAD\Projects\22-098 PID WTP Equalizer Tank Replacement\07 Drawings\2298D-20E102.dgn
PLOT DATE: 3/24/2024 PLOT TIME: 4:18:40 AM

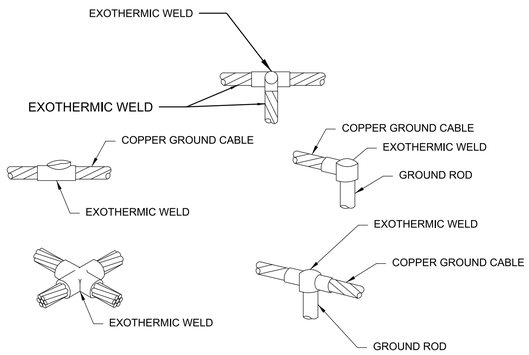

TYPICAL EXOTHERMIC WELDS

NTS

26 05 26.01

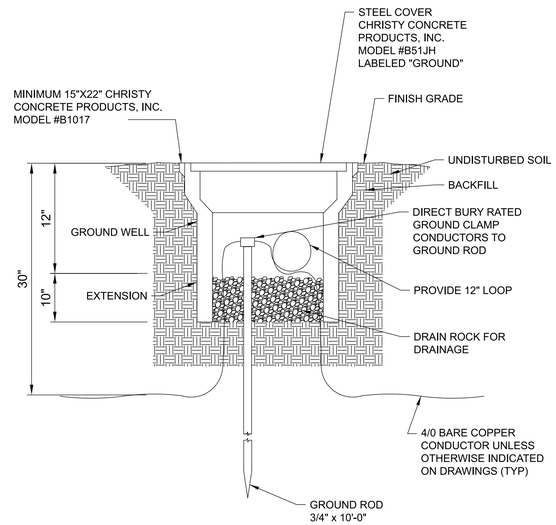

GROUND ROD INSTALLATION

NTS

26 05 26.10

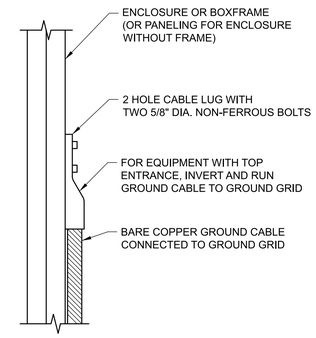

TYPICAL EQUIPMENT ENCLOSURE OR BOX GROUNDING

NTS

26 05 26.20

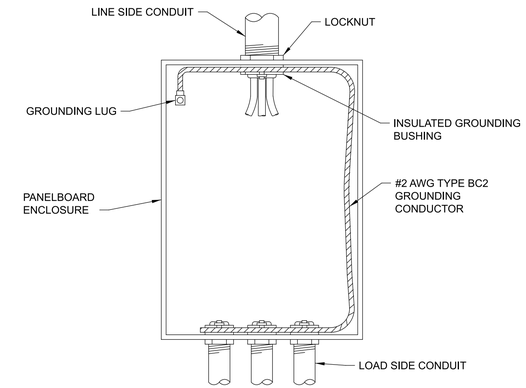

TYPICAL PANELBOARD CONDUIT GROUNDING

NTS

26 05 26.22

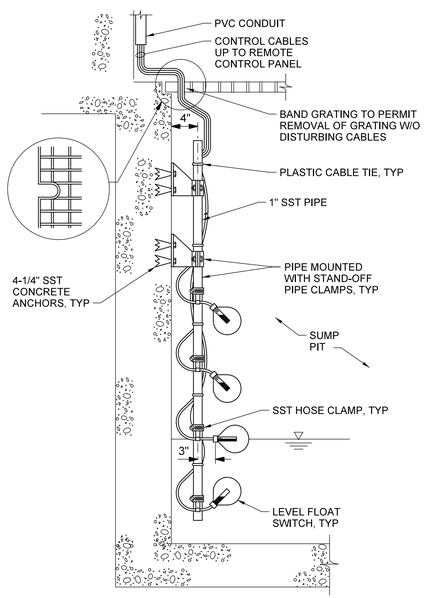

LEVEL SWITCH SUPPORT BRACKET

NTS

26 05 29.21

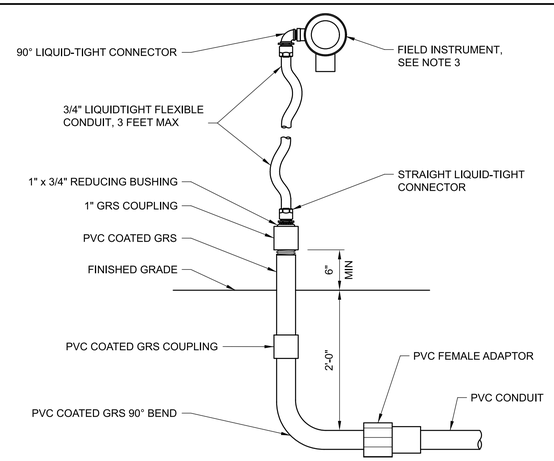

NOTES:

1. WHERE CONDUITS ARE INSTALLED INA CONCRETE SLAB, THE 2'-0" DIMENSION DOES NOT APPLY. CONDUITS SHALL BE INSTALLED BETWEEN REBAR MATS OR UNDER A SINGLE REBAR MAT.
2. IN CORROSIVE AREAS, PVC COATED GRS SHALL BE USED.
3. MOUNT INSTRUMENT AS PER MANUFACTURER'S RECOMMENDATIONS.
4. INSULATE WATER LINES AND TRANSMITTER TO PREVENT FREEZING.

PVC COATED GRS STUB-UP TO LTC DETAIL

NTS

26 05 30.34

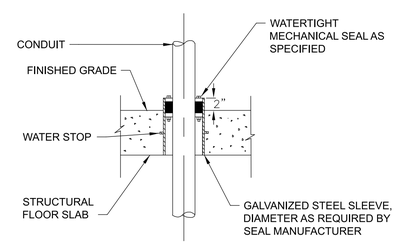

CONDUIT PENETRATION

NTS

26 05 35.01

VERIFY SCALE

BAR IS ONE INCH ON ORIGINAL DRAWING

0 1"

IF NOT ONE INCH ON THIS SHEET, ADJUST SCALES ACCORDINGLY

NO	DATE	REVISION	BY	APVD

FOR REFERENCE ONLY
PROJECT MANAGER RFP
(NOT FOR CONSTRUCTION)

REGISTERED PROFESSIONAL ENGINEER JOSEPH A. RIESS No. C66413 CIVIL STATE OF CALIFORNIA 3/25/2024

DESIGN: J. BOYLES
DRAWN: J. MARTIN
CHECKED: B. YOUNG
APPROVED: J. RIESS

WATERWORKS ENGINEERS
760 CYPRESS AVE SUITE 201, REDDING, CA. 96001

PARADISE IRRIGATION DISTRICT

WASHWATER EQUALIZER TANK REPLACEMENT PROJECT

PARADISE, CA

ELECTRICAL

STANDARD DETAILS

DATE: MARCH 2024
PROJECT NO.: 22-098
DRAWING NO.: ESD-1
SHEET NO.: 47

FILENAME: L:\CAD\Projects\22-098 PID WTP Equalizer Tank Replacement\07 Drawings\2298D-ESD001.dgn

PLOT DATE: 3/24/2024 PLOT TIME: 3:36:35 AM

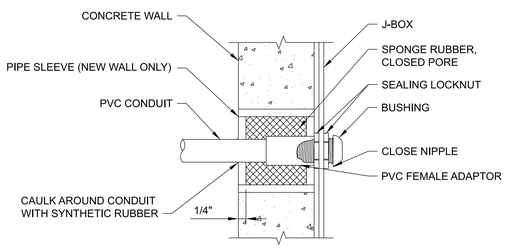

NOTE:

1. IN EXISTING WALL, CORE DRILL HOLE CONDUIT OD +1-1/2". IN NEW CONCRETE, WALL OR DRY WALL, INSTALL PVC SCHEDULE 40 SLEEVE, CONDUIT OD +1-1/2"

CONDUIT THROUGH CONCRETE WALL

NTS

26 05 35.02

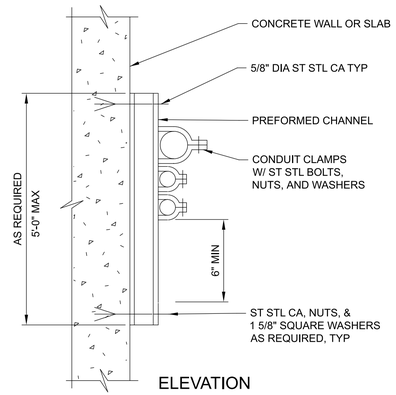

NOTES:

1. THIS DETAIL TYPICAL FOR BOTH VERTICAL AND HORIZONTAL MOUNTING.
2. PREFORMED CHANNEL, FITTINGS, AND CLAMPS SHALL BE STAINLES STEEL. FIELD COAT ALL CUTS PER SPECIFICATIONS.
3. CHANNELS TO BE SPACED AT 5'-0" OC MAXIMUM.
4. PROVIDE STAINLESS STEEL CHANNEL AND MOUNTING HARDWARE.

CONDUIT SUPPORT

NTS

26 05 35.15

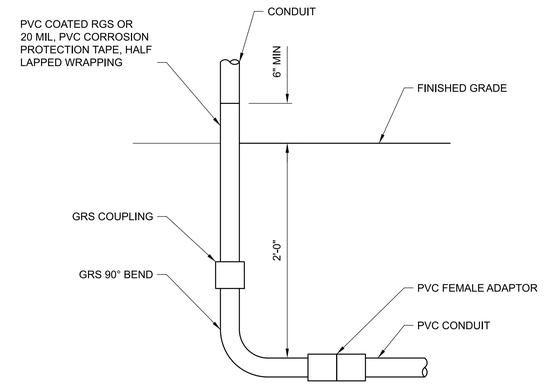

NOTES:

1. WHERE CONDUITS ARE INSTALLED IN A CONCRETE SLAB, THE 2'-0" DIMENSION DOES NOT APPLY. CONDUITS SHALL BE INSTALLED BETWEEN REBAR MATS OR UNDER A SINGLE REBAR MAT.
2. CONDUIT MATERIAL SHALL BE PER SPECIFICATIONS.

CONDUIT STUB-UP

NTS

26 05 35.20

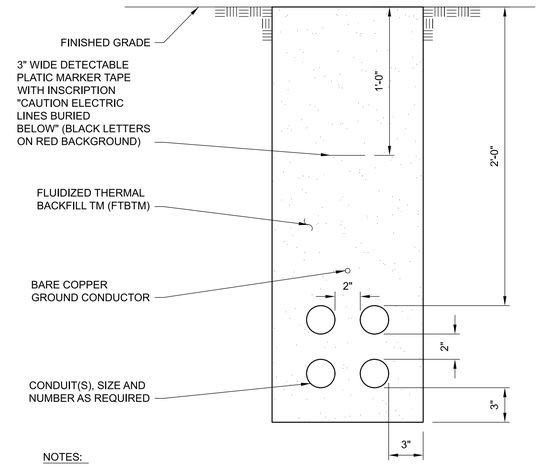

NOTES:

1. GROUND CONDUCTORS SHALL RUN CONTINUOUSLY THROUGH MANHOLES AND SHALL CONTINUE FROM DUCTBANK INTO SWITCHGEAR OR BUILDING GROUNDING SYSTEM AND SHALL BE BONDED TO EACH RIGID METAL CONDUIT. SIZE TO BE 4/0 UNLESS OTHERWISE INDICATED ON PLANS.
2. ALL DIMENSIONS ARE MINIMUM.
3. FLUIDIZED THERMAL BACKFILL TM (FTBTM) SHALL HAVE MINIMUM RHO OF 75 C-CM/W.

TRENCH/DUCTBANK DETAIL

NTS

26 05 43.04

VERIFY SCALE

BAR IS ONE INCH ON ORIGINAL DRAWING

0 1"

IF NOT ONE INCH ON THIS SHEET, ADJUST SCALES ACCORDINGLY

NO	DATE	REVISION	BY	APVD

FOR REFERENCE ONLY
PROJECT MANAGER RFP
(NOT FOR CONSTRUCTION)

REGISTERED PROFESSIONAL ENGINEER JOSEPH A. RIESS No. C66413 CIVIL STATE OF CALIFORNIA 3/25/2024

DESIGN J. BOYLES
DRAWN J. MARTIN
CHECKED J. RIESS
APPROVED J. RIESS

WATERWORKS ENGINEERS
760 CYPRESS AVE SUITE 201, REDDING, CA. 96001

PARADISE IRRIGATION DISTRICT

WASHWATER EQUALIZER TANK REPLACEMENT PROJECT

PARADISE, CA

ELECTRICAL

STANDARD DETAILS

DATE MARCH 2024
PROJECT NO. 22-098
DRAWING NO. ESD-2
SHEET NO. 48

FILENAME: L:\CAD\Projects\22-098 PID WTP Equalizer Tank Replacement\07 Drawings\2298D-ESD001.dgn

PLOT DATE: 3/24/2024 PLOT TIME: 3:37:03 AM

PROCESS LINES

LINE WEIGHT, COLOR & LINE TYPE	DESCRIPTION:
	PRIMARY PROCESS LINE
	PRIMARY PROCESS LINE (DEMO)
	PRIMARY PROCESS LINE (FUTURE)
	PRIMARY PROCESS LINE (VENDOR SUPPLIED)
	PRIMARY PROCESS LINE (EXIST)
	SECONDARY PROCESS LINE
	SECONDARY PROCESS LINE (DEMO)
	SECONDARY PROCESS LINE (FUTURE)
	SECONDARY PROCESS LINE (VENDOR SUPPLIED)
	SECONDARY PROCESS LINE (EXIST)
	AUXILIARY / TERTIARY PROCESS LINE
	AUXILIARY / TERTIARY PROCESS LINE (DEMO)
	AUXILIARY / TERTIARY PROCESS LINE (FUTURE)
	AUXILIARY / TERTIARY PROCESS LINE (VENDOR SUPPLIED)
	AUXILIARY / TERTIARY PROCESS LINE (EXIST)
	HEAT TRACE
	INSTRUMENT SUPPLY / CONNECTION TO PROCESS
	CAPILLARY SIGNAL
	ELECTRICAL SIGNAL
	ELECTROMAGNETIC / SONIC SIGNAL NON-GUIDED
	SONIC SIGNAL GUIDED
	CAT 5E ETHERNET SIGNAL
	FIBER OPTIC SIGNAL
	HYDRAULIC SIGNAL
	RS-485 2-WIRE MODBUS SIGNAL
	MECHANICAL LINK SIGNAL
	PNEUMATIC SIGNAL
	SOFTWARE SIGNAL
	UNIDENTIFIED SIGNAL

PROCESS SYMBOLS

SYMBOL	DESCRIPTION:
	SIGNAL LINE BREAK
	PROCESS LINE BREAK
	SECONDARILY CONTAINED PIPING
	BOX INDICATING FUNCTIONAL GROUPS OR EQUIPMENT THAT REPEATS
	ARROW INDICATES DIRECTION OF PROCESS FLOW
	ARROW INDICATES DIRECTION OF SIGNAL FLOW
	SIGNAL CONNECTION POINT
	PROCESS LINES CROSSING (NOT CONNECTED)
	PROCESS LINES CROSSING (CONNECTED)
##-??-### A	PROCESS GOING TO ANOTHER SHEET (MATCH LETTERS)
B ##-??-###	PROCESS LINE FROM ANOTHER SHEET (MATCH LETTERS)
##-??-### 1	SIGNAL GOING TO ANOTHER SHEET (MATCH NUMBERS)
2 ##-??-###	SIGNAL LINE FROM ANOTHER SHEET (MATCH NUMBERS)
	PROCESS LINE CONTINUED OUTSIDE SCOPE OF DRAWINGS
	ANALOG SIGNAL IN
	ANALOG SIGNAL OUT
	DISCRETE SIGNAL IN
	DISCRETE SIGNAL OUT
	PULSED SIGNAL IN
	FLOAT SWITCH
	LIQUID LEVEL / SURFACE
(SPEC) (SPEC)	PIPE SPEC CHANGE
###V OR ###V	INSTRUMENT POWER SUPPLY
OR	RADIO ANTENNA

ISA INSTRUMENT SYMBOLS & IDENTIFICATION

	FIRST LETTERS		SUCCEEDING LETTERS		
	MEASURE / INITIATING VARIABLE	VARIABLE MODIFIER	READOUT / PASSIVE FUNCTION	OUTPUT / ACTIVE FUNCTION	FUNCTION MODIFIER
A	ANALYSIS		ALARM		
B	BURNER, COMBUSTION		USER'S CHOICE	USER'S CHOICE	USER'S CHOICE
C	USER'S CHOICE			CONTROL	CLOSE
D	USER'S CHOICE	DIFFERENCE, DIFFERENTIAL			DEVIATION
E	VOLTAGE		SENSOR, PRIMARY ELEMENT		
F	FLOW, FLOW RATE	RATIO			
G	USER'S CHOICE		GLASS, GAUGE, VIEWING DEVICE		
H	HAND				HIGH
I	CURRENT		INDICATE		
J	POWER		SCAN		
K	TIME, SCHEDULE	TIME RATE OF CHANGE		CONTROL STATION	
L	LEVEL		LIGHT		LOW
M	USER'S CHOICE				MIDDLE, INTERMEDIATE
N	USER'S CHOICE		USER'S CHOICE	USER'S CHOICE	USER'S CHOICE
O	USER'S CHOICE		ORIFICE, RESTRICTION		OPEN
P	PRESSURE		POINT (TEST CONNECTION)		
Q	QUANTITY	INTEGRATE, TOTALIZE	INTEGRATE, TOTALIZE		
R	RADIATION		RECORD		RUN
S	SPEED, FREQUENCY	SAFETY		SWITCH	STOP
T	TEMPERATURE			TRANSMIT	
U	MULTIVARIABLE		MULTIFUNCTION	MULTIFUNCTION	
V	VIBRATION, MECHANICAL ANALYSIS			VALVE, DAMPER, LOUVER	
W	WEIGHT, FORCE		WELL, PROBE		
X	UNCLASSIFIED	X-AXIS	ACCESSORY DEVICE, UNCLASSIFIED	UNCLASSIFIED	UNCLASSIFIED
Y	EVENT, STATE, PRESENCE	Y-AXIS		AUXILIARY DEVICES	
Z	POSITION, DIMENSION	Z-AXIS, SAFETY INSTRUMENTED SYSTEM		DRIVER, ACTUATOR, UNCLASSIFIED FINAL CONTROL ELEMENT	

GENERAL INSTRUMENT & DIGITAL INTERFACE SYMBOLS

	FIELD MOUNTED INSTRUMENT	PANEL MOUNTED INSTRUMENT	MCC MOUNTED INSTRUMENT	INACCESSIBLE INSTRUMENT
DISCRETE INSTRUMENTS	XXX ###	XXX ###	XXX ###	XXX ###
SHARED DISPLAY SHARED CONTROL	XXX ###	XXX ###	XXX ###	XXX ###
COMPUTER FUNCTION	XXX ###	XXX ###	XXX ###	XXX ###
PROGRAMMABLE LOGIC CONTROL	XXX ###	XXX ###	XXX ###	XXX ###

S/S PIT 40101	INSTRUMENT WITH LONG LOOP NUMBER	P	PURGE OR FLUSHING DEVICE	LVL LIT 10201	RADAR
PI 38101 PIT 38101	INSTRUMENTS SHARING A COMMON HOUSING	R	REST FOR LATCH-TYPE ACTUATOR	S	SAMPLE POINT
ALM YL 10101	PILOT LIGHT PANEL MOUNTED		DIAPHRAGM SEAL		
ALM YL 10101	PILOT LIGHT FIELD MOUNTED	I#	UNDEFINED INTERLOCK LOGIC		
A 10	PANEL MOUNTED PATCH BOARD POINT 10	LVL LIT	ULTRA SONIC		

INSTRUMENT TAG NUMBERING SYSTEM

INSTRUMENT IDENTIFICATION (REFER TO TABLE ABOVE RIGHT) — SUCCEEDING LETTER(S) / FIRST LETTER(S): FIT 08101B

INSTRUMENT ID (ISA STANDARD) — DUPLICATE INSTRUMENT: FIT 08 101 B

PROCESS AREA IDENTIFIER — LOOP NUMBER

10301 — SYSTEM I/O INTERFACE. DIRECTION OF FLOW INDICATES WHETHER IT IS INPUT OR OUTPUT

ZS 40220 — LETTERS, TAG NUMBERS, ABBREVIATIONS & OTHER ANNOTATIONS ARE SIMILAR TO THE ABOVE INSTRUMENT IDENTIFICATION.

HOA — INSTRUMENT FUNCTION OR CONTROL DESCRIPTOR

FIT 08201B

PROCESS AREA NUMBER DESIGNATION — UNIQUE NUMBER

10-FLT-101

EQUIPMENT TYPE

VERIFY SCALE	NO	DATE	REVISION	BY	APVD
BAR IS ONE INCH ON ORIGINAL DRAWING 0 — 1"			FOR REFERENCE ONLY PROJECT MANAGER RFP (NOT FOR CONSTRUCTION)		
IF NOT ONE INCH ON THIS SHEET, ADJUST SCALES ACCORDINGLY					

REGISTERED PROFESSIONAL ENGINEER JOSEPH A. RIESS No. C66413 CIVIL STATE OF CALIFORNIA 3/25/2024

DESIGN J. BOYLES
DRAWN J. ISIDORO
CHECKED B. YOUNG
APPROVED J. RIESS

WATERWORKS ENGINEERS
760 CYPRESS AVE SUITE 201, REDDING, CA. 96001

PARADISE IRRIGATION DISTRICT
WASHWATER EQUALIZER TANK REPLACEMENT PROJECT
PARADISE, CA

INSTRUMENTATION
LEGEND NO. 1

DATE MARCH 2024
PROJECT NO. 22-098
DRAWING NO. N-1
SHEET NO. 49

FILENAME: L:\CAD\Projects\22-098 PID WTP Equalizer Tank Replacement\07 Drawings\2298D-N001.dgn
PLOT DATE: 3/24/2024 PLOT TIME: 3:38:17 AM

PROCESS VALVES

SYMBOL	DESCRIPTION:
ARV-###	AIR RELIEF VALVE
AVV-###	AIR VACUUM VALVE
BFP-###	BACKFLOW PREVENTER VALVE
BPRV-###	BACK PRESSURE REDUCING VALVE
BCV-###	BALL CHECK VALVE
BAV-### NO / BAV-### NC	GATE VALVE NO = NORMALLY OPEN NC = NORMALLY CLOSED
BFV-###	BUTTERFLY VALVE
CARV-###	COMBINATION AIR RELIEF / AIR VACUUM VALVE
CRP-###	CORPORATION STOP VALVE
DPB-###	DIAPHRAGM VALVE
CHK-###	DUAL DISK SWING CHECK VALVE
CHK-###	DUCK BILL CHECK VALVE
GAV-### NO / GAV-### NC	GATE VALVE NO = NORMALLY OPEN NC = NORMALLY CLOSED
GLV-### NO / GLV-### NC	GLOBE VALVE NO = NORMALLY OPEN NC = NORMALLY CLOSED
MV-###	MUD VALVE
MPV-### / MPV-###	MULTI-PORT VALVE(S)
NV-###	NEEDLE VALVE
PV-###	PINCH VALVE
PLV-### NO / PLV-### NC	PLUG VALVE NO = NORMALLY OPEN NC = NORMALLY CLOSED
PRV-###	PRESSURE RELIEF VALVE
PRV-###	PRESSURE REGULATING VALVE
RDV-###	RUPTURE DISK (PRESSURE RELEASE)
RDV-###	RUPTURE DISK (VACUUM RELEASE)

PROCESS VALVES (CONT.)

SYMBOL	DESCRIPTION:
CHK-###	SILENT CHECK VALVE
CHK-###	CHECK VALVE
TV-###	TELESCOPING VALVE
	SLIDE GATE / KNIFE GATE
	STOP LOG
	WEIR
M	MOTORIZED VALVE OPERATOR
P	PNEUMATIC VALVE OPERATOR
S	SOLENOID VALVE OPERATOR

PROCESS FITTINGS & DEVICES

SYMBOL	DESCRIPTION:
	BLIND FLANGE
	PIPE CAP
	EXPANSION COUPLING
	FLEXIBLE COUPLING
	DIAPHRAGM SEAL
	DRAIN
	GAUGE
	DOUBLE CONTAINMENT PIPE
	NOZZLE
	DIFFUSER
	ORIFICE PLATE
	PILOT TUBE
	PULSATION DAMPER
	QUICK CONNECTOR COUPLING WITH CAP
	QUICK CONNECTOR COUPLING
	QUICK CONNECTOR COUPLING (FEMALE)
	QUICK CONNECTOR COUPLING (MALE)
	REDUCER, CONCENTRIC
	REDUCER, ECCENTRIC

PROCESS FITTINGS & DEVICES (CONT.)

SYMBOL	DESCRIPTION:
	SIGHT GLASS
	SILENCER
	STATIC MIXER
	SONIC FLOW ELEMENT
	SPRAY BAR
	TARGET TYPE FLOW ELEMENT
	TOTALIZING ELEMENT: POSITIVE DISPLACEMENT FLOW
	TURBINE / PROPELLER FLOW ELEMENT
	UNION
V	VENT
	VENTURI TUBE
	Y-STRAINER
	CLEAN OUT
FI	ROTAMETER
FI	ROTAMETER WITH NEEDLE VALVE

PROCESS EQUIPMENT

SYMBOL	DESCRIPTION:
	AIR INTAKE FILTER
	AUTO STRAINER
	BASKET STRAINER
	FILTER
FM	FLOW METER (MAGNETIC)
M	MIXER
M	AXIAL FLOW PUMP
	BACK DRAFT DAMPER

PROCESS EQUIPMENT (CONT.)

SYMBOL	DESCRIPTION:
	BAR RACK
	COARSE SCREEN
	FINE SCREEN
	SCREENINGS COMPACTOR / WASHER
	SCREW CONVEYOR
	CENTRIFUGE
	DUMPSTER
	EJECTOR
	CALIBRATION COLUMN
	WASTE GAS BURNER
	INJECTION QUILL
	PROGRESSIVE CAVITY PUMP
M	SUBMERSIBLE PUMP
	CENTRIFUGAL PUMP
	METERING PUMP

PROCESS EQUIPMENT (CONT.)

SYMBOL	DESCRIPTION:
	PERISTALTIC PUMP
	CENTRIFUGAL BLOWER
	BLOWER FAN
	COMPRESSOR POSITIVE DISPLACEMENT

PROCESS EQUIPMENT (CONT.)

SYMBOL	DESCRIPTION:
M	EQUIPMENT MOTOR
	HEAT EXCHANGER
	BOILER
	SAFETY SHOWER / EYEWASH STATION
	GRIT BASIN
M	GRIT CLASSIFIER WITH CONCENTRATOR
M	COARSE GRIT SCREEN
	VERTICAL TURBINE PUMP

VERIFY SCALE

BAR IS ONE INCH ON ORIGINAL DRAWING

0 1"

IF NOT ONE INCH ON THIS SHEET, ADJUST SCALES ACCORDINGLY

NO	DATE	REVISION	BY	APVD

FOR REFERENCE ONLY
PROJECT MANAGER RFP
(NOT FOR CONSTRUCTION)

REGISTERED PROFESSIONAL ENGINEER JOSEPH A. RIESS No. C66413 CIVIL STATE OF CALIFORNIA 3/25/2024

DESIGN: J. BOYLES
DRAWN: J. ISIDORO
CHECKED: B. YOUNG
APPROVED: J. RIESS

WATERWORKS ENGINEERS
760 CYPRESS AVE SUITE 201, REDDING, CA. 96001

PARADISE IRRIGATION DISTRICT

WASHWATER EQUALIZER TANK REPLACEMENT PROJECT

PARADISE, CA

INSTRUMENTATION

LEGEND NO. 2

DATE: MARCH 2024
PROJECT NO.: 22-098
DRAWING NO.: N-2
SHEET NO.: 50

FILENAME: L:\CAD\Projects\22-098 PID WTP Equalizer Tank Replacement\07 Drawings\2298D-N002.dgn

PLOT DATE: 3/24/2024 PLOT TIME: 3:39:40 AM

ABBREVIATIONS:

A	AMPERE
AB	AERATION BASIN
ABI	AERATION BASIN INFLUENT
ACK	ACKNOWLEDGE(D)
AF	AIR FLOW
AI	ANALOG INPUT
AIC	AMPS INTERRUPTING CAPACITY
ALM	ALARM
ALT	ALTITUDE VALVE
ANN	ANNUNCIATOR
AO	ANALOG OUTPUT
ARV	AIR RELIEF VALVE
AS	AIR SUPPLY
ATS	AUTOMATIC TRANSFER SWITCH
AUTO	AUTOMATIC
BAV	BALL VALVE
BDD	BACKDRAFT DAMPENER
BFP	BACKFLOW PREVENTER
BFV	BUTTERFLY VALVE
BLWR	BLOWER
BP	BACKPULSE
CARV	COMBINATION AIR RELEASE & VACUUM VALVE
CB	CIRCUIT BREAKER
CEN	CENTRIFUGE
CC	CALIBRATION COLUMN
CIP	CLEAN-IN-PLACE
CIPMC	CLEAN-IN-PLACE MAINTENANCE CLEAN
CIPRC	CLEAN-IN-PLACE RECOVERY CLEAN
CKV	CHECK VALVE
CL2	CHLORINE
CMP	COMPRESSOR
CON	CONTACTOR
COND	CONDUCTIVITY
CP	CONTROL PANEL
CLPG	COUPLING
CRP	CORPORATION VALVE
CTRL	CONTROL
CU	COPPER, BARE
CV	CONTROL VALVE
D	DRAIN
DEC	DECREASE
DEPL	DEPLETION
DG	DIGESTER GAS
DI	DISCRETE INPUT
DIA	DIAPHRAGM VALVE
DIF	DIFFUSERS
DCL2	DECHLORINATION
DO	DISCRETE OUTPUT
DP	DIFFERENTIAL PRESSURE
DWG	DRAWING
EFF	EFFLUENT
EGO	EMERGENCY GAS OFF
ETM	ELAPSED TIME METER
ETMF	ELAPSED TIME METER (FAST SPEED)
ETMS	ELAPSED TIME METER (SLOW SPEED)
EQPM	EQUIPMENT
EOL	ELECTRONIC OVERLOAD
ES	EMERGENCY STOP
EXIST	EXISTING
F	FILTER
FA	FOUL AIR
FC	FAIL CLOSED
FCV	FLOW CONTROL VALVE
FDBK	FEEDBACK
FE	FINAL EFFLUENT
FI	FLOW INDICATOR
FL	FAIL
FLR	FLARE
FLTR	FILTER
FM	FLOW METER
FO	FLOW ORIFICE
FR	FORWARD-REVERSE
FS	FLOAT SWITCH OR FLOW SWITCH
FVNR	FULL VOLTAGE NON-REVERSING
FW	FINISHED WATER
FWD	FORWARD
GAT	GATE
GND	GROUND
GAL	GALLONS
GAV	GATE VALVE
GLB	GLOBE VALVE
GPD	GALLONS PER DAY
GPH	GALLONS PER HOUR
GPM	GALLONS PER MINUTE
H, HI	HIGH
HMI	HUMAN MACHINE INTERFACE
HOA	HAND-OFF-AUTO
HSV	HOSE VALVE
HYD	HYDRANT
I	CURRENT
INC	INCREASE
INF	INFLUENT
IO	INPUT / OUTPUT
IOE	INTERNAL-OFF-EXTERNAL
JB	JUNCTION BOX
JOR	JOG-OFF-REMOTE
L, LO	LOW
LCS	LOCAL CONTROL STATION
LEAK	LEAK DETECTION
LOR	LOCAL-OFF-REMOTE
LOS	LOCAL-OFF-STOP
LR	LOCAL / REMOTE
LS	LIFT STATION, LEVEL SWITCH (I.E. FLOAT)
M, MTR	MOTOR
MA	MANUAL / AUTO
MA	MILLIAMP
MC	MANUFACTURE CABLE
MCC	MOTOR CONTROL CENTER
MCP	MOTOR CIRCUIT PROTECTOR
MDF	MAIN DISTRIBUTION FRAME
MEMBR	MEMBRANE
MF	MEMBRANE FILTRATION
MFR(S)	MANUFACTURE(S)
MGCL2	MAGNESIUM CHLORIDE
MGD	MILLION GALLONS PER DAY
MGL	MILLIGRAMS PER LITER
MH	MANHOLE
MO	MOISTURE
MOD	MODULATED
MP	METERING PUMP
MSTR	MOTOR STARTER
MTU	MASTER TELEMETRY UNIT
NAOCL	SODIUM HYPOCHLORITE
NEUT	NEUTRALIZATION
NIA	NOT IN AUTO
NG	NATURAL GAS
NH3	AMMONIA
NPW	NON-POTABLE WATER
OC	OPEN-CLOSE
OCA	OPEN-CLOSE-AUTO
OCR	OPEN-CLOSE-REMOTE
OIT	OPERATOR INTERFACE TERMINAL
OL	OVERLOAD
OO	ON/OFF (MAINTAINED)
OOA	ON-OFF-AUTO
OOR	ON-OFF-REMOTE
ORP	OXIDATION REDUCTION POTENTIAL
OSC	OPEN-STOP-CLOSE
P, PMP	PUMP
PAH	PRESSURE HIGH ALARM
PART	PARTICLE COUNTER
PB	PUSH BUTTON
PC	PNEUMATIC CONTROLLER
PCV	PRESSURE CONTROL VALVE
PD	PULSATION DAMPENER
PDS	PRESSURE DIAPHRAGM SEAL
PER	PERMISSIVE
pH	HYDROGEN ION CONCENTRATION
PLC	PROGRAMMABLE LOGIC CONTROLLER
PLV	PLUG VALVE
PNL	PANEL
PO	PULSED OUTPUT
POL	POLYMER
POS	POSITIONER OR POSITION
POT	POTENTIOMETER
PPG	POUNDS PER GALLON
PPH	POUNDS PER HOUR
PPM	PARTS PER MILLION
PR	PAIR
P, PRES	PRESSURE
PRIM	PRIMARY
PRV	PRESSURE REDUCING / REGULATING / RELIEF VALVE
PS	PRESSURE SWITCH
PSI	POUNDS PER SQUARE INCH
PW	PUBLIC WORKS
R	RUN / RUNNING
RAS	RETURN ACTIVATED SLUDGE
RAW	RAW WATER
RD	RUPTURE DISK
RF	RADIO FREQUENCY
RIO	REMOTE INPUT / OUTPUT
RLX	RELAX
RMT	REMOTE
RNING	RUNNING
RR	REVERSE ROTATION
RS	RAW SEWAGE
RSP	RAW SEWAGE PUMP
RST	RESET
RTD	RESISTANCE TEMPERATURE DEVICE
RTU	REMOTE TERMINAL UNIT
RVS	REVERSE
S	SUMP
SB	SLUDGE BLANKET
SBS	SODIUM BISULFATE
SCC	SCREW CONVEYOR
SCR	SCREEN
SECD	SECONDARY
SEL	SELECTOR
SEQ	SERVICE ENTRANCE EQUIPMENT
SES	SERVICE ENTRANCE SECTION
SFTN	SOFTENED WATER
SHC	SODIUM HYPOCHLORITE
SIL	SILENCER
SLC	SINGLE LOOP CONTROLLER
SLG	SLIDE GATE
SLOS	START-LOCK-OFF-STOP
SOL	SOLENOID VALVE
SP	SET POINT
SPD	SPEED
SPR	SPARE
SS	START / STOP (MAINTAINED)
SSS	SOLID STATE STARTER (SOFT START)
ST	STOP
STBY	STANDBY
STR	STRAINER
STRT	START
SWR	SAFETY SHOWER
T, TEMP	TEMPERATURE
TAH	TEMPERATURE ALARM HIGH
TERT	TERTIARY
TCL2	TOTAL CHLORINE
T/M	TEMPERATURE AND/OR MOISTURE
TK	TANK
TRV	THERMAL RELIEF VALVE
TS	TEMPERATURE SWITCH
TSS	TOTAL SUSPENDED SOLIDS
TURB	TURBIDITY
TWAS	THICKENED WASTE ACTIVATED SLUDGE
UG	UNDERGROUND
UV	ULTRAVIOLET
V	VOLT
VFD	VARIABLE FREQUENCY DRIVE
W	WATER
WAS	WASTE ACTIVATED SLUDGE
WSH	WASHER
WW	WASTEWATER
XMTR	TRANSMITTER
ZS	POSITION SWITCH (I.E. LIMIT)

VERIFY SCALE

BAR IS ONE INCH ON ORIGINAL DRAWING

0 1"

IF NOT ONE INCH ON THIS SHEET, ADJUST SCALES ACCORDINGLY

NO	DATE	REVISION	BY	APVD

FOR REFERENCE ONLY
PROJECT MANAGER RFP
(NOT FOR CONSTRUCTION)

REGISTERED PROFESSIONAL ENGINEER JOSEPH A. RIESS No. C66413 CIVIL STATE OF CALIFORNIA 3/25/2024

DESIGN J. BOYLES
DRAWN J. ISIDORO
CHECKED B. YOUNG
APPROVED J. RIESS

WATERWORKS ENGINEERS
760 CYPRESS AVE SUITE 201, REDDING, CA. 96001

PARADISE IRRIGATION DISTRICT

WASHWATER EQUALIZER TANK REPLACEMENT PROJECT

PARADISE, CA

INSTRUMENTATION

ABBREVIATIONS

DATE MARCH 2024
PROJECT NO. 22-098
DRAWING NO. N-3
SHEET NO. 51

FILENAME: L:\CAD\Projects\22-098 PID WTP Equalizer Tank Replacement\07 Drawings\2298D-N003.dgn PLOT DATE: 3/24/2024 PLOT TIME: 4:21:29 AM

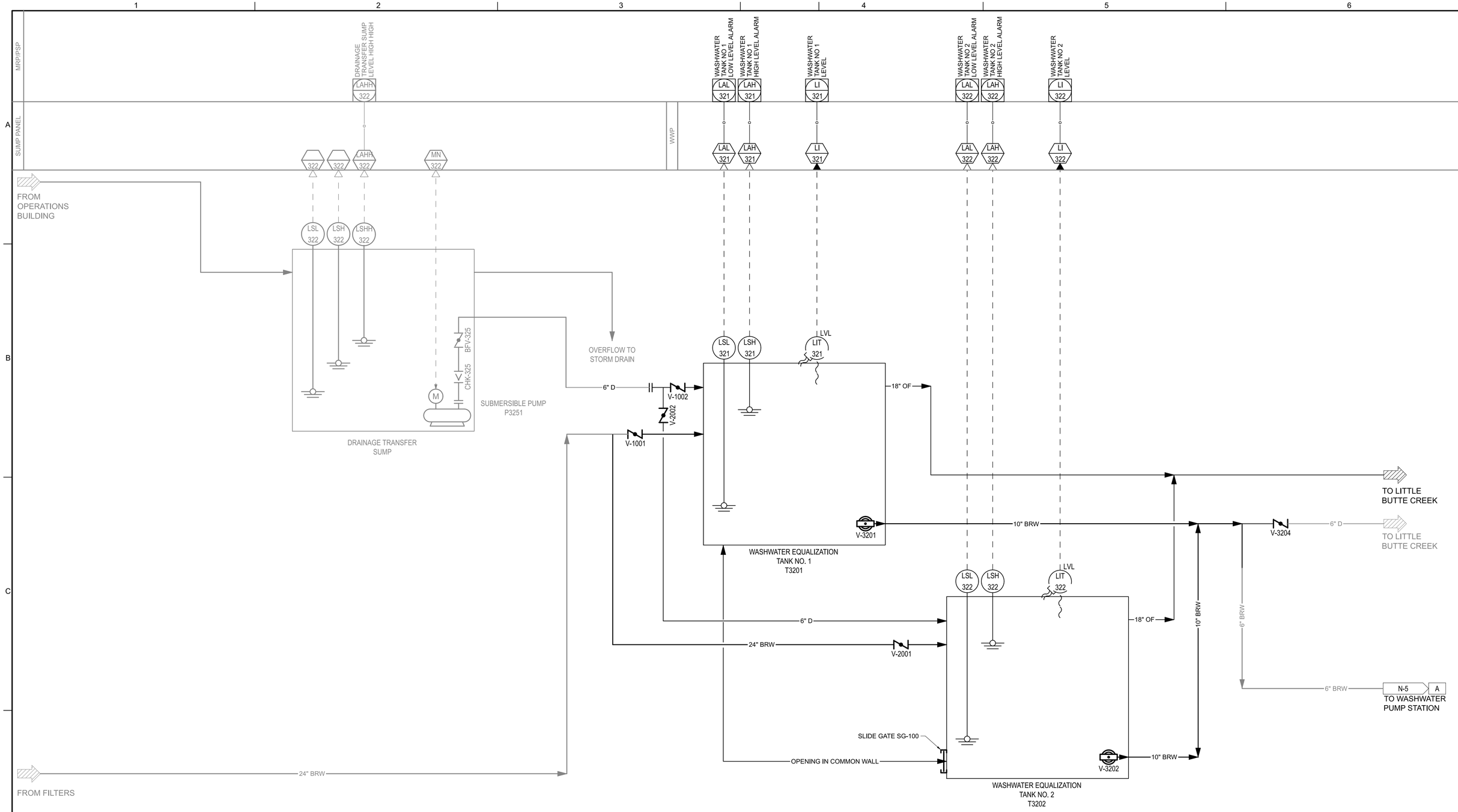

VERIFY SCALE

BAR IS ONE INCH ON ORIGINAL DRAWING

0 1"

IF NOT ONE INCH ON THIS SHEET, ADJUST SCALES ACCORDINGLY

NO	DATE	REVISION	BY	APVD

FOR REFERENCE ONLY
PROJECT MANAGER RFP
(NOT FOR CONSTRUCTION)

REGISTERED PROFESSIONAL ENGINEER JOSEPH A. RIESS No. C66413 CIVIL STATE OF CALIFORNIA 3/25/2024

DESIGN: J. BOYLES
DRAWN: J. ISIDORO
CHECKED: B. YOUNG
APPROVED: J. RIESS

WATERWORKS ENGINEERS
760 CYPRESS AVE SUITE 201, REDDING, CA. 96001

PARADISE IRRIGATION DISTRICT

WASHWATER EQUALIZER TANK REPLACEMENT PROJECT

PARADISE, CA

INSTRUMENTATION

WASHWATER EQUALIZATION TANKS P&ID

DATE: MARCH 2024
PROJECT NO.: 22-098
DRAWING NO.: N-4
SHEET NO.: 52

FILENAME: L:\CAD\Projects\22-098 PID WTP Equalizer Tank Replacement\07 Drawings\2298D-N004.dgn

PLOT DATE: 3/24/2024 PLOT TIME: 4:19:14 AM

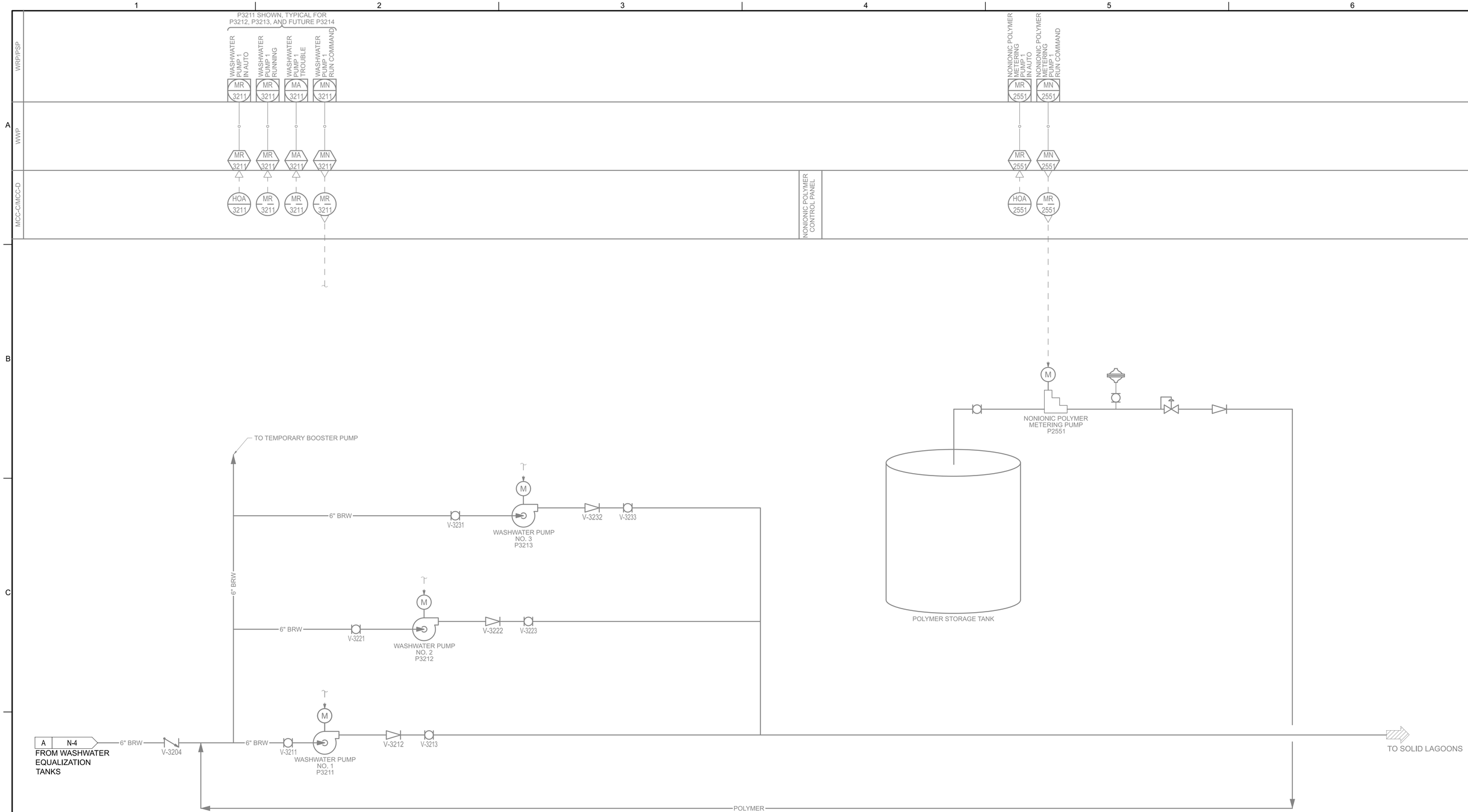

VERIFY SCALE				
BAR IS ONE INCH ON ORIGINAL DRAWING 0 1" IF NOT ONE INCH ON THIS SHEET, ADJUST SCALES ACCORDINGLY	NO	DATE	REVISION	BY	APVD

FOR REFERENCE ONLY
PROJECT MANAGER RFP
(NOT FOR CONSTRUCTION)

REGISTERED PROFESSIONAL ENGINEER JOSEPH A. RIESS No. C66413 CIVIL STATE OF CALIFORNIA 3/25/2024

DESIGN J. BOYLES
DRAWN J. ISIDORO
CHECKED B. YOUNG
APPROVED J. RIESS

WATERWORKS ENGINEERS
760 CYPRESS AVE SUITE 201, REDDING, CA. 96001

PARADISE IRRIGATION DISTRICT
WASHWATER EQUALIZER TANK REPLACEMENT PROJECT
PARADISE, CA

INSTRUMENTATION
WASHWATER PUMP STATION P&ID

DATE MARCH 2024
PROJECT NO. 22-098
DRAWING NO. N-5
SHEET NO. 53

FILENAME: L:\CAD\Projects\22-098 PID WTP Equalizer Tank Replacement\07 Drawings\2298D-N005.dgn
PLOT DATE: 3/24/2024 PLOT TIME: 4:07:57 AM